CAMERON
A Schlumberger Company

Gate-Style DEMCO Valves

Dependability, inline repairability, flexible trim options, and drop-tight position shutoff

Contents

Introduction 3
Series DM gate valves 4
Product specifications 5

Dimensions, materials, and parts list

Series DM gate valves

7,500-psi working pressure (WP) 6
5,000-psi WP 14
ASME Class 600 22
ASME Class 900 24
ASME Class 1500 26

Series DMA gate valve

7,500-psi WP—automated 30
5,000-psi WP—automated 38

Oklahoma City, Oklahoma, USA.

Introduction

Cameron is a leading provider of valves, valve automation, and measurement systems to the oil and gas industry. Our products are primarily used to control, direct, and measure the flow of oil and gas as it is moved to refineries, petrochemical plants, and industrial centers for processing.

We provide valve products that are sold through distributor networks worldwide. Our products are used in oil and gas and industrial applications and include widely recognized brands such as DEMCO* valves; NAVCO* floating ball valves; NEWCO* gate, globe, and check valves; DOUGLAS CHERO* forged-steel gate, globe, and check valves; NUTRON* ball valves; TOM WHEATLEY* check valves; WHEATLEY* check valves; and WKM* valves.

Designed for dependable, heavy-duty performance in abrasive and corrosive service conditions, butterfly-style DEMCO valves are commonly selected for a number of oilfield applications, including drilling and production.

Series DM Gate Valves

Series DM gate valves, the premier gate valve in the oil and gas drilling market, are specifically engineered for the rigorous requirements of oilfield applications. Designed for dependable, heavy-duty performance in abrasive service conditions, Series DM gate valves are commonly selected for a number of oilfield applications, including

- drilling standpipe manifold
- pump manifold block valves
- high-pressure mud mixing lines
- high-pressure drilling system block valves.

The Series DM gate valves are available in ASME Classes 600, 900, and 1500. They also are available in 5,000-psi gauge pressure and 7,500-psi gauge pressure (not API monogrammed).

Features and benefits

Inline field repairability

The bonnet is easily removed for internal parts inspection, replacement, or both without removing the valve from the line. This design simplicity permits fast and easy service without the need for special tools.

Flexible trim offerings

Optional materials for stems, gates, seat inserts, and seat elastomers make it easier to trim valves for a wide range of service conditions.

Automation

Automation is available for 5,000- and 7,500-psi pressure-rated valves.

Exclusive seats design for drop-tight sealing

The Series DM gate valve seats use an unique design to provide a drop-tight shutoff in abrasive and erosive service.

The valves conform to

- American Bureau of Shipping (ABS)
- Det Norske Veritas (DNV)
- NACE MR0175.

Series DM 7500

The seat consists of two identical metal wear rings encapsulated in elastomer to form a cylindrical shape with a gate slot and two round ports. The closed gate bears on the downstream wear ring, and the elastomer provides a drop-tight pressure-responsive seal around the port.

Series DM 5000, Class 600, 900, 1500

The cylindrical seat assembly fits into the machined body cavity and is expanded outward toward the valve ports by the bonnet and spread ring in the bottom of the seat. The expansion occurs when the bonnet is tightened onto the body while engaging the seat pin extensions from both wear rings. The spread ring ensures the seat elastomer presses uniformly against the body bore. This design ensures that the seat seals tight against the body and around each valve port. This design has proved to be effective even if the gate and seat ring become scored or abraded during service. When it comes time for maintenance, the seat's single-piece design makes it easy to pull out of the body for replacement.

5-in [130-mm] 7,500-psi WP Series DM gate valve.

5-in [130-mm] 5,000-psi WP Series DMA gate valve.

DM Series Pressure Classes and Sizes						
Port	Size, in [mm]	Pressure Classes				
		600	900	1500	5000	7500
Full port (FP)	2 [50]	●	●	●	●	
	2½ [65]	●	●	●		
	3 [80]	●	●	●	●	●
	4 [100]	●	●	●	●	●
	5 [125]				●	●
	6 [150]	●	●			
Reduced port (RP)	2 × 1½ [50 × 40]	●				
	2½ × 2 [65 × 50]				●	
	3 × 2 [80 × 50]	●				
	4 × 3 [100 × 80]				●	●
	5 × 4 [125 × 100]				●	●
	6 × 4 [150 × 100]				●	
	6 × 5 [150 × 125]				●	●
	8 × 6 [200 × 150]	●				

Product Specifications

Series DM gate valve general technical information

Valve size designations and weld end dimensional information

All references to pipe size in this catalog are the nominal size. The actual OD and ID for various nominal sizes and schedules are tabulated below. Weld end bodies are machined at each end to match the pipe OD and ID.

Nominal Size, in [mm]	OD	ID			
		Sch. 40	Sch. 80	Sch. 160	XXH
1½ [40]	1.900	1.610	1.500	–	–
2 [50]	2.375	2.067	1.939	1.687	1.503
2½ [65]	2.875	2.469	2.323	2.125	1.771
3 [80]	3.500	3.068	2.900	2.624	2.300
4 [100]	4.500	4.026	3.826	3.438	3.152
5 [125]	5.563	–	4.813	4.313	4.063
6 [150]	6.625	6.065	5.761	5.187	4.897

Quality, inspections, and testing

- The Cameron quality system is based on ISO 9000 and API Spec Q1 requirements and is ISO 9001:2008 certified. Cameron monitors all phases of valve production, from material receipt to final inspection, including liaising with third-party inspectors and certifying authorities.

  All gate-style DEMCO valves are hydrostatically tested; stem seal, body, and seat are inspected for zero leakage under pressure before being released for shipment. Hydrotest specifications are based upon the latest-edition API Spec 6A testing requirements; Series DM 7500 Groups 2 and 3 valves undergo additional test cycles, including low-pressure seat tests prior to being released for shipment.
- **Group 1**—Basic valve. Hydrostatic shell test—11,250 psi for 3 min. Hydrostatic seat test—7,500 psi for 3 min, each side. Material traceability on body and bonnet.
- **Group 2**—Same as Group 1, except hydrostatic shell test—11,250 psi for 3 min, drop to 0 psi, then 11,250 psi for 15 min. Test is charted. Hydrostatic seat test—7,500 psi for 3 min, drop to 0 psi, 7,500 psi for 15 min, drop to 0 psi, then 300 psi for 5 min, each side. Test is charted. Material traceability on body, bonnet, stem, and bolting. Impact tests at or below –50 degF [–46 degC] on body, bonnet, stem, and bolting. Surface nondestructive examination (NDE) on body, bonnet, and stem.
- **Group 3**—Same as Group 2, plus volumetric NDE on body and bonnet.

Seat seal options

- **Buna-N (nitrile)** is excellent for petroleum oil and gases, fuel oils, and alcohols from –10 to 200 degF [–23 to 93 degC].
- **FKM** is highly resistant to mineral acids and hydrocarbons, and is serviceable from –10 to 400 degF [–23 to 204 degC]; not suitable for steam.
- **HNBR** is formulated for use with synthetic and oil-based drilling mud service from –20 to 250 degF [–29 to 121 degC].

Ordering information

- Give pipe size, pressure class, and end connection.
- Specify pressure class of flanged ends, raised face (RF), or ring type joint (RTJ).
- For threaded ends, provide type of pipe:
  - nonupset tubing (TBG)
  - long casing thread (LCSG)
  - external upset tubing (UPTBG)
  - short casing thread (CSG).
- For weld ends, give schedule of mating pipe.

Dimensions, Materials, and Parts List

Series DM gate valves—7,500-psi WP

2-in [50-mm] seat port

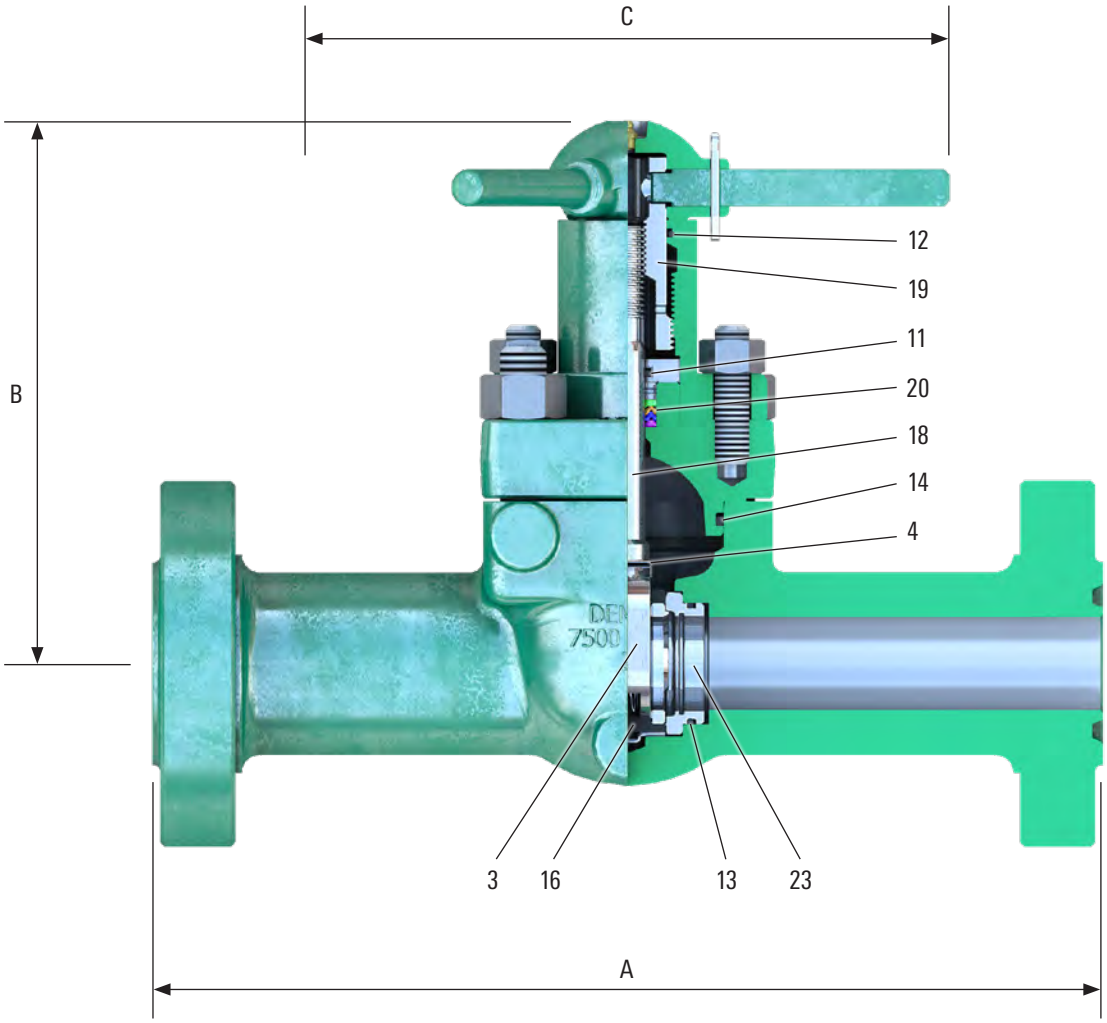

Dimensional Data and Weights		
Dimension	**Valve Seat Port Size for 7,500-psi WP: 2 in [50 mm]**	
A, length, in [mm]	Weld end	9.00 [229]
	Flanged end, API length	20.50 [521]
	Hammer union end	15.74 [400]
For flanged ends	API ring number	BX-152
	Flange ID, in [mm]	2.00 [50]
	Flange OD, in [mm]	7.88 [200]
	Flange bolts, amount; in [mm]	8; ¾ [19]
Weight, lbm [kg]	Weld end	83 [38]
	Flanged end	144 [65]
	Hammer union end	101 [46]
Number of handle turns from open to closed		8.6
B, height, center to top (open), in [mm]		13.04 [331]
C, handle diameter, in [mm]		14.00 [356]

Assembly Part Number Example

J025088-3 7 7 2 1 4 0

Assembly Base Number
2 in [50 mm], Group 1

- Ring groove inlay
- Seat and seal elastomer
- Seat ring material
- Gate and wear ring material
- Stem material
- End connection

End Connection	
No.	**Description**
Flanged	
3	10,000 RTJ
Weld	
2	2.00-in [50 mm] XXH
4	3.00-in [80-mm] OD × 2.00-in [50-mm] ID
Hammer union	
9	2.00-in [50-mm] XXH 1502 hammer union

Body Configuration	
No.	**Description**
5	Weld
7	Flanged
9	Hammer union

Stem Material	
No.	**Description**
7	410 stainless steel (SS)

Gate and Wear Ring Material	
No.	**Description**
2	41XX and 41XX
7	410 SS and 410 SS

Seat Ring Material	
No.	**Description**
1	410 SS

Seat and Seal Elastomer	
No.	**Description**
2	FKM and FKM
4	HNBR and HNBR

Ring Groove Inlay	
No.	**Description**
0	–
1	316 SS inlay†
2	625 SS inlay†

† Inlay only available on flanged valves.

Parts List

Repair Kit	Key No.	Qty.	Description	Valve Seat Port Size for 7,500-psi WP: 2 in [50 mm]			Repair Kit Component Part Numbers
				Group 1	Group 2	Group 3	
			Assembly Base Number—NACE Compliant	J025088	J025103	J025104	
	1	1	Body	ASTM A487 Gr. 4 Class D			–
	2	1	Bonnet	4130			–
■ ●	3	1	Gate	41XX with quench, polish, quench (QPQ) nitriding			2171111-01
				410 SS with QPQ nitriding			2139624-02
■ ●	4	1	Gate clip	3XX SS			M450480
	5	1	Handle	ASTM A536 Gr. 65-45-12			–
	6	4	Heavy hex nut, 1-8 UNC	ASTM A194 Gr. 2H	ASTM A194 Gr. 7		–
	7	2	Heavy hex nut, ¾-10 UNC	ASTM A194 Gr. 2H	ASTM A194 Gr. 7		–
	8	1	Housing	ASTM A350 Gr. LF2 Class 1			J024982
	9	1	Lock handle	CD 1213/15			–
	10	1	Lubricating nipple, ⅛ NPT	Steel			–
■	11	1	O-ring, AS-568-210, secondary seal	HNBR			2712425-13
				FKM			J005531-210
■	12	1	O-ring, AS-568-224, housing seal	Buna-N			J005526-224
■ ●	13	2	O-ring, AS-568-229, wear ring seal	HNBR			2712425-03
				FKM			J005521-229
■ ●	14	1	O-ring, AS-568-342, bonnet seal	HNBR			2712425-60
				FKM			J005521-342
	15	1	Retainer	CD 1213/15	17-4PH SS		–
■ ●	16	1	Seat assembly	410 SS with QPQ nitriding and HNBR			2139742-01
				410 SS with QPQ nitriding and FKM			2139741-02
	17	1	Split pin, 3⁄16 in × 1¾ in [5 × 45]	Steel			–
■	18	1	Stem	410 SS			J024983-107
■	19	1	Stem screw	CD 1213/15			J001913
■	20	1	Stem seal assembly with bushing	HNBR and bronze			JN23231-008
				FKM and bronze			JN23231-006
	21	4	Stud (double ended), 1-8 UNC × 4.50 (long)	ASTM A193 Gr. B7	ASTM A193 Gr. L7		–
	22	2	Stud (double ended), ¾-10 UNC × 3.00 (long)	ASTM A193 Gr. B7	ASTM A193 Gr. L7		–
■ ●	23	2	Wear ring	41XX with QPQ nitriding			M452267
				410 SS			2139647-02

■ Major repair kit J025177-10274—one each for one year of service.
● Minor repair kit J025177-00274.
Major and minor repair kits listed for trim option J0XXXXX-XX72140 (410 SS stem, 41XX with QPQ gate, HNBR seat and seals).
Consult Cameron for other repair kit trim options.

Series DM gate valves—7,500-psi WP

3-in [80-mm] seat port

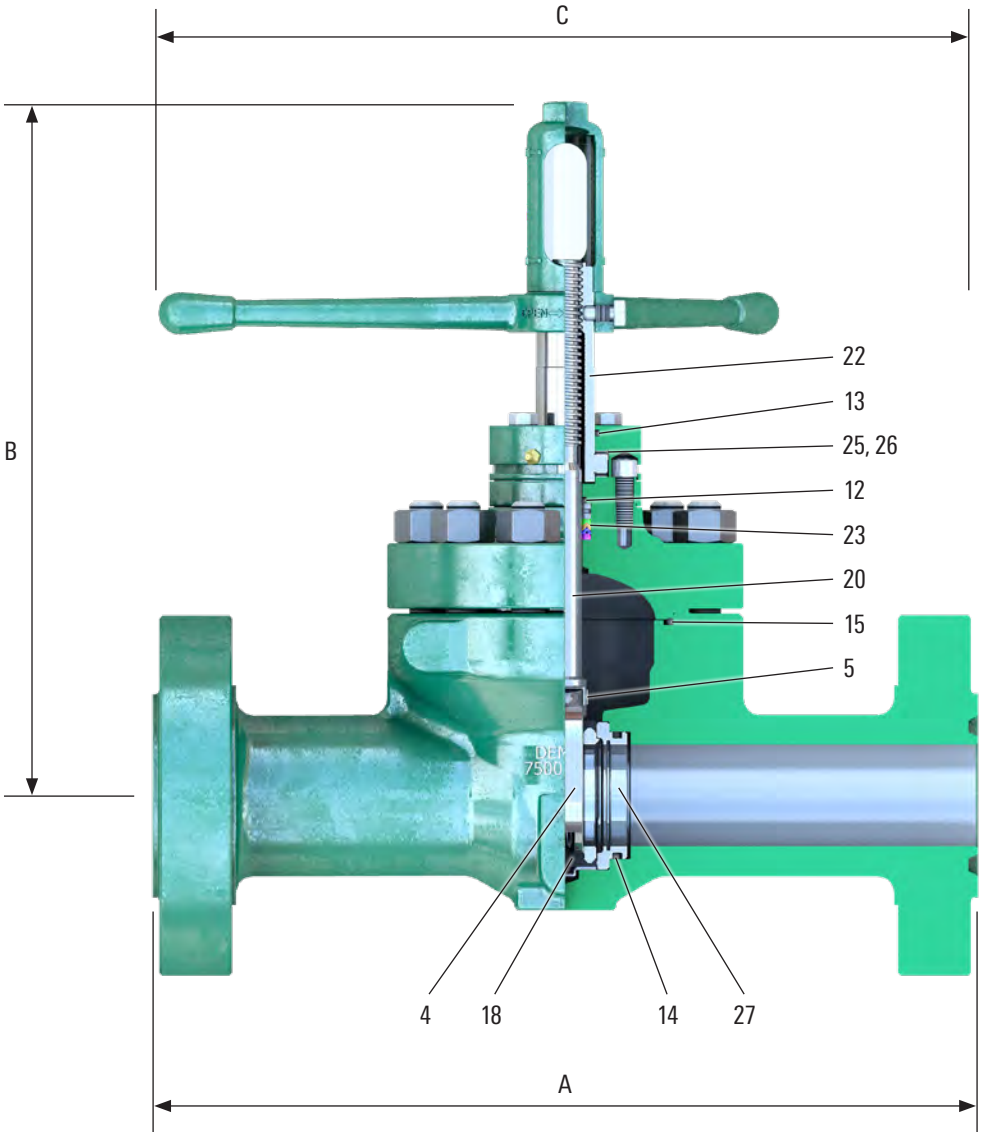

Dimensional Data and Weights			
Dimension	**Valve Seat Port Size for 7,500-psi WP: 3 in [80 mm]**		
A, length, in [mm]	Weld end		13.00 [330]
	Flanged end		24.38 [619]
	Hammer union end	4 in	24.62 [625]
		3 in	18.88 [480]
For flanged ends	API ring number		BX-154
	Flange ID, in [mm]		3.00 [80]
	Flange OD, in [mm]		10.62 [270]
	Flange bolts, amount; in [mm]		8; 1 [25]
Weight, lbm [kg]	Weld end		185 [84]
	Flanged end		299 [136]
	Hammer union end	4 in	269 [122]
		3 in	211 [96]
Number of handle turns from open to closed			16.0
B, height, center to top (open), in [mm]			20.48 [520]
C, handle diameter, in [mm]			24.00 [610]

Assembly Part Number Example

J025299-3 7 7 2 1 2 1

Assembly Base Number
3 in [80 mm], Group 1

- Ring groove inlay
- Seat and seal elastomer
- Seat ring material
- Gate and wear ring material
- Stem material
- End connection

End Connection	
No.	**Description**
Flanged	
3	10,000 RTJ
Weld	
2	3.00-in [80-mm] XXH
4	4.00-in [100-mm] XXH
5	4.50-in [114-mm] OD × 2.96-in [75-mm] ID
Hammer union	
8	3.00-in [80-mm] XXH 1502 hammer union
9	4.00-in [100-mm] XXH 1502 hammer union

Body Configuration	
No.	**Description**
5	Weld
7	Flanged
9	Hammer union

Stem Material	
No.	**Description**
7	410 SS

Gate and Wear Ring Material	
No.	**Description**
2	41XX and 41XX
7	410 SS and 410 SS

Seat Ring Material	
No.	**Description**
1	410 SS

Seat and Seal Elastomer	
No.	**Description**
2	FKM and FKM
4	HNBR and HNBR

Ring Groove Inlay	
No.	**Description**
0	–
1	316 SS inlay†
2	625 SS inlay†

† Inlay only available on flanged valves.

Parts List

Repair Kit	Key No.	Qty.	Description	Valve Seat Port Size for 7,500-psi WP: 3 in [80 mm]			Repair Kit Component Part Numbers
				Group 1	Group 2	Group 3	
			Assembly Base Number—NACE Compliant	J025299	J025300	J025301	
	1	1	Body	ASTM A487 Gr. 4 Class D			–
	2	1	Bonnet	4130			–
	3	4	Capscrew socket head, ½ UNC × 1.50 (long)	ASTM A574 Alloy Steel	18-8 SS		–
■ ●	4	1	Gate	41XX with QPQ nitriding			2171112-01
				410 SS with QPQ nitriding			2139628-02
■ ●	5	1	Gate clip	3XX SS			M450505
	6	1	Handle	ASTM A536 Gr. 65-45-12			–
	7	1	Handle screw	CD 1018/26			–
	8	12	Heavy hex nut, 1-8 UNC	ASTM A194 Gr. 2H	ASTM A194 Gr. 7		–
	9	1	Housing	HR 1018/22			–
	10	4	Hex head bolt, ½-13 UNC × 3.00 (long)	SAE International steel Gr. 5			–
	11	1	Lubricating nipple, ⅛ NPT	Steel			–
■	12	1	O-ring, AS-568-214, secondary seal	HNBR			2712425-01
				FKM			J005531-214
■	13	1	O-ring, AS-568-224, housing seal	Buna-N			J005526-224
■ ●	14	2	O-ring, AS-568-340, wear ring seal	HNBR			2712783-03
				FKM			J005521-340
■ ●	15	1	O-ring, AS-568-361, bonnet seal	HNBR			2712787-07
				FKM			J005521-361
	16	1	Relief fitting, ⅛ NPT	Steel			–
	17	1	Retainer	HR 1018/22	17-4PH SS		–
■ ●	18	1	Seat assembly	410 SS with QPQ nitriding and HNBR			2139744-01
				410 SS with QPQ nitriding and FKM			2139743-02
	19	1	Sight tube	Clear acrylic			–
■	20	1	Stem	410 SS			213597-01
	21	1	Stem cap	ASTM A536 Gr. 65-45-12			–
■	22	1	Stem screw	CD 1018/26			213600-01
■	23	1	Stem seal assembly with bushing	HNBR and bronze			JN01951-008
				FKM and bronze			JN01951-006
	24	12	Stud (double ended), 1-8 UNC × 4.50 (long)	ASTM A193 Gr. B7	ASTM A193 Gr. L7		–
■	25	2	Thrust needle roller bearing	Hardened steel			50315432
■	26	4	Thrust washer	Hardened steel			50315409
■ ●	27	2	Wear ring	41XX with QPQ nitriding			M452571
				410 SS			2139648-02

■ Major repair kit J025177-11374—one each for one year of service.
● Minor repair kit J025177-00374.
Major and minor repair kits listed for trim option J0XXXXX-XX72140 (410 SS stem, 41XX with QPQ gate, and HNBR seat and seals).
Consult Cameron for other repair kit trim options.

Series DM gate valves—7,500-psi WP

4-in [100-mm] seat port

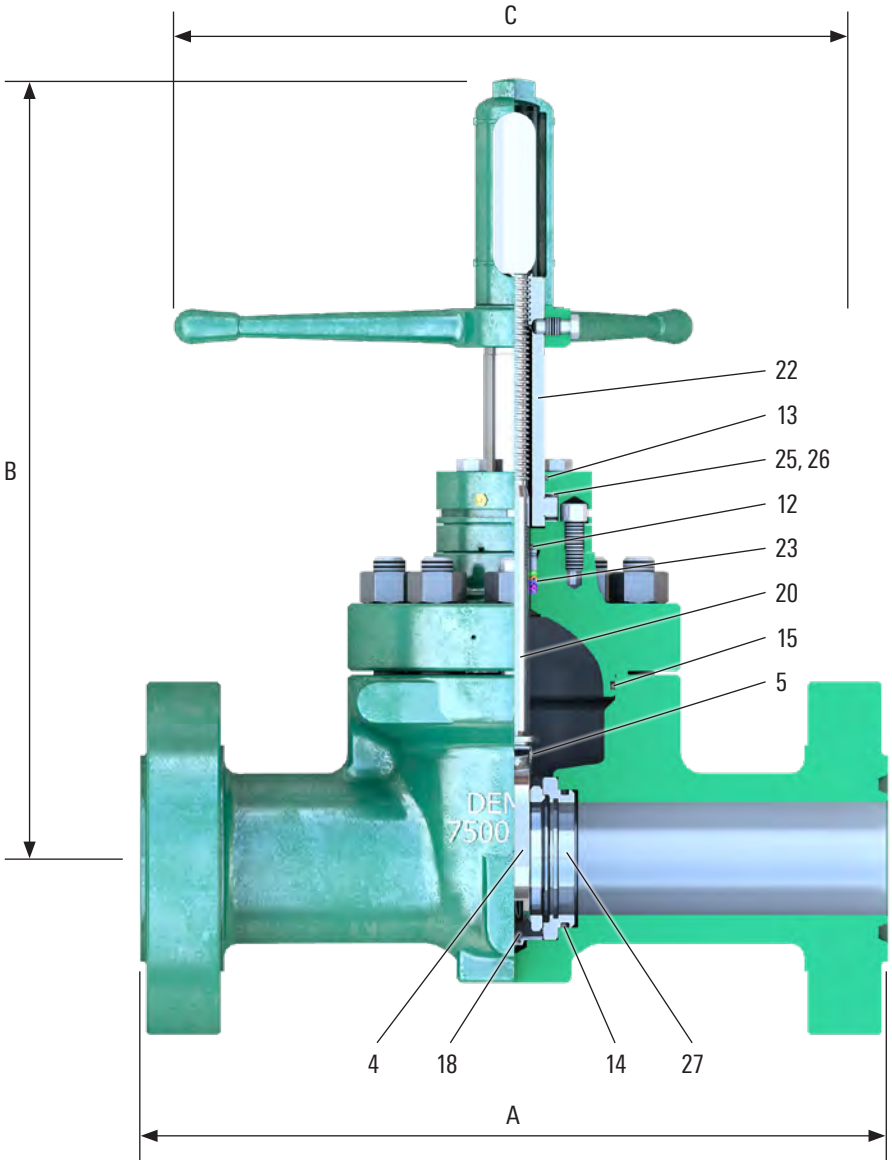

Dimensional Data and Weights			
Dimension	**Valve Seat Port Size for 7,500-psi WP: 4 in [100 mm]**		
A, length, in [mm]	Weld end		16.00 [406]
	Flanged end		26.38 [670]
	Hammer union end	5 in	25.62 [651]
		4 in	27.62 [702]
For flanged ends	API ring number		BX-155
	Flange ID, in [mm]		4.00 [100]
	Flange OD, in [mm]		12.44 [316]
	Flange bolts, amount; in [mm]		8; 1⅛ [29]
Weight, lbm [kg]	Weld end		281 [127]
	Flanged end		456 [207]
	Hammer union end	5 in	379 [172]
		4 in	365 [166]
Number of handle turns from open to closed			21.3
B, height, center to top (open), in [mm]			27.53 [699]
C, handle diameter, in [mm]			24.00 [610]

Assembly Part Number Example

J025102-3772142

Assembly Base Number
4 in [100 mm], Group 1

- Ring groove inlay
- Seat and seal elastomer
- Seat ring material
- Gate and wear ring material
- Stem material
- End connection

End Connection

No.	Description
Flanged	
3	10,000 RTJ
Weld	
2	4.00-in [100-mm] XXH
3	5.00-in [125-mm] XXH
4	5.81-in [148-mm] OD × 4.06-in [103-mm] ID
5	6.00-in [152-mm] OD × 4.00-in [100-mm] ID
Hammer union	
8	4.00-in [100-mm] XXH 1502 hammer union
9	5.00-in [125-mm] XXH 1502 hammer union

Body Configuration

No.	Description
5	Weld
7	Flanged
9	Hammer union

Stem Material

No.	Description
7	410 SS

Gate and Wear Ring Material

No.	Description
2	41XX and 41XX
7	410 SS and 410 SS

Seat Ring Material

No.	Description
1	410 SS

Seat and Seal Elastomer

No.	Description
2	FKM and FKM
4	HNBR and HNBR

Ring Groove Inlay

No.	Description
0	–
1	316 SS inlay†
2	625 SS inlay†

† Inlay only available on flanged valves.

Parts List

Repair Kit	Key No.	Qty.	Description	Valve Seat Port Size for 7,500-psi WP: 4 in [100 mm]			Repair Kit Component Part Numbers
				Group 1	Group 2	Group 3	
			Assembly Base Number—NACE Compliant	J025102	J025107	J025108	
	1	1	Body	ASTM A487 Gr. 4 Class D			–
	2	1	Bonnet	4130			–
	3	4	Capscrew socket head, ⅝ UNC × 1.75 (long)	ASTM A574 Alloy Steel	18-8 SS		–
■ ●	4	1	Gate	41XX with QPQ nitriding			2171267-01
				410 SS with QPQ nitriding			2139637-02
■ ●	5	1	Gate clip	3XX SS			M450505
	6	1	Handle	ASTM A536 Gr. 65-45-12			–
	7	1	Handle screw	CD 1018/26			–
	8	10	Heavy hex nut, 1⅛-8 UNC	ASTM A194 Gr. 2H	ASTM A194 Gr. 7		–
	9	4	Hex head bolt, ⅝-11 UNC × 3.50 (long)	SAE steel Gr. 5			–
	10	4	Housing	HR 1018/22			–
	11	1	Lubricating nipple, ⅛ NPT	Steel			–
■	12	1	O-ring, AS-568-216, secondary seal	HNBR			2726268-01
				FKM			J005531-216
■	13	1	O-ring, AS-568-228, housing seal	Buna-N			J005526-228
■ ●	14	2	O-ring, AS-568-349, wear ring seal	HNBR			2712787-04
				FKM			J005521-349
■ ●	15	1	O-ring, AS-568-364, bonnet seal	HNBR			2712426-11
				FKM			J005521-364
	16	1	Relief fitting, ⅛ NPT	Steel			–
	17	1	Retainer	HR 1018/22	17-4PH SS		–
■ ●	18	1	Seat assembly	410 SS with QPQ nitriding and HNBR			2139746-01
				410 SS with QPQ nitriding and FKM			2139745-02
	19	1	Sight tube	Clear acrylic			–
■	20	1	Stem	410 SS			2140684-01
	21	1	Stem cap	ASTM A536 Gr. 65-45-12			–
■	22	1	Stem screw	CD 1018/26			J019159
■	23	1	Stem seal assembly with bushing	HNBR and bronze			JN15853-008
				FKM and bronze			JN15853-006
	24	10	Stud (double ended), 1⅛-8 UNC × 5.50 (long)	ASTM A193 Gr. B7	ASTM A193 Gr. L7		–
■	25	2	Thrust needle roller bearing	Hardened steel			J050911-005
■	26	4	Thrust washer	Hardened steel			J050911-006
■ ●	27	2	Wear ring	41XX with QPQ nitriding			M452290
				410 SS			2139649-02

■ Major repair kit J025177-10474—one each for one year of service.
● Minor repair kit J025177-00474.
Major and minor repair kits listed for trim option J0XXXXX-XX72140 (410 SS stem, 41XX with QPQ gate, and HNBR seat and seals).
Consult Cameron for other repair kit trim options.

Series DM gate valves—7,500-psi WP

5.12-in [130-mm] seat port

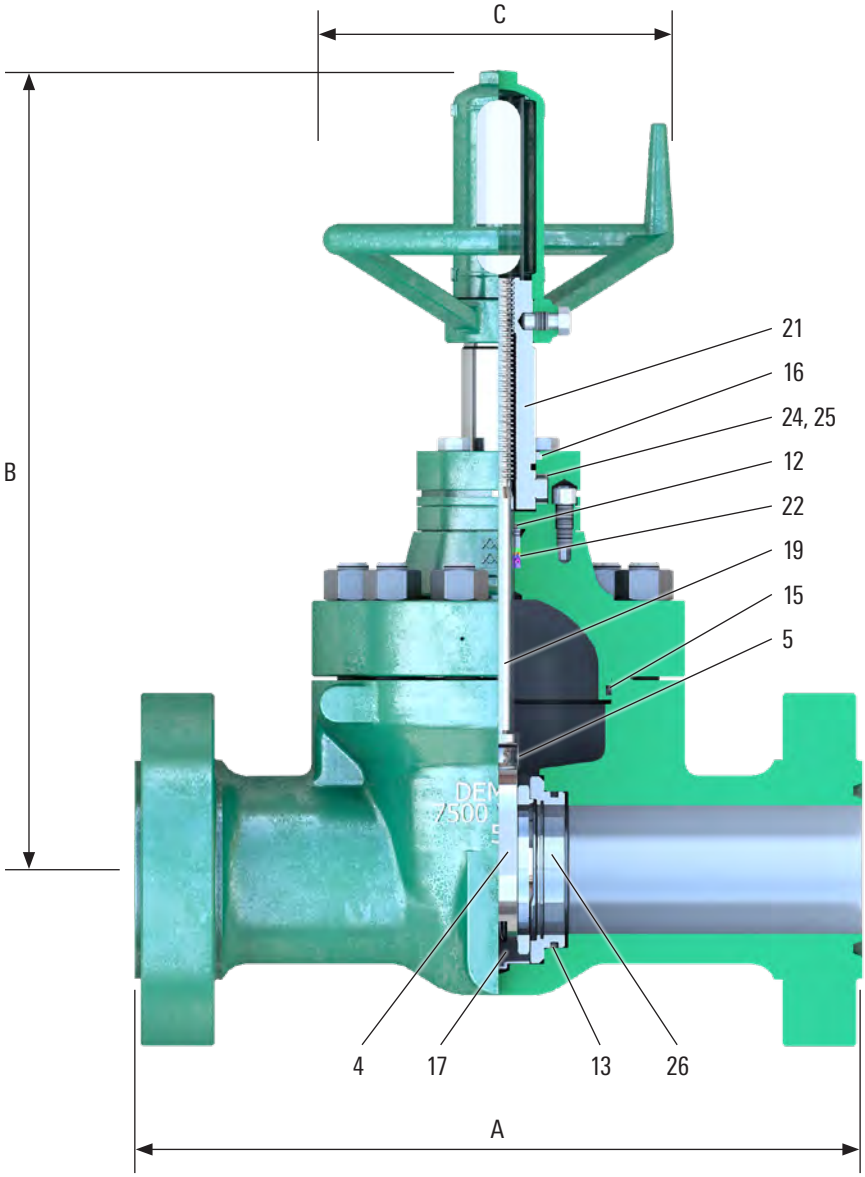

Dimensional Data and Weights		
Dimension	**Valve Seat Port Size for 7,500-psi WP: 5.12 in [130 mm]**	
A, length, in [mm]	Weld end	17.88 [454]
	Flanged end	29.00 [737]
For flanged ends	API ring number	BX-169
	Flange ID, in [mm]	5.12 [130]
	Flange OD, in [mm]	14.06 [357]
	Flange bolts, amount; in [mm]	12; 1⅛ [29]
Weight, lbm [kg]	Weld end	532 [241]
	Flanged end	772 [350]
Number of handle turns from open to closed		27.8
B, height, center to top (open), in [mm]		31.87 [809]
C, handle diameter, in [mm]		24.00 [610]

Assembly Part Number Example

J025090-3 7 7 7 1 2 0

Assembly Base Number
5.12 in [130 mm],
Group 1

- End connection
- Stem material
- Gate and wear ring material
- Seat ring material
- Seat and seal elastomer
- Ring groove inlay

End Connection	
No.	**Description**
Flanged	
3	10,000 RTJ
Weld	
4	6.00-in [150-mm] XXH
6	7.25-in [184-mm] OD × 5.12-in [130-mm] ID

Body Configuration	
No.	**Description**
5	Weld
7	Flanged

Stem Material	
No.	**Description**
7	410 SS

Gate and Wear Ring Material	
No.	**Description**
2	41XX and 41XX
7	410 SS and 410 SS

Seat Ring Material	
No.	**Description**
1	410 SS

Seat and Seal Elastomer	
No.	**Description**
2	FKM and FKM
4	HNBR and HNBR

Ring Groove Inlay	
No.	**Description**
0	–
1	316 SS inlay†
2	625 SS inlay†

† Inlay only available on flanged valves.

Parts List

Repair Kit	Key No.	Qty.	Description	Valve Seat Port Size for 7,500-psi WP: 5.12 in [130 mm]			Repair Kit Component Part Numbers
				Group 1	Group 2	Group 3	
			Assembly Base Number—NACE Compliant	J025090	J025109	J025110	
	1	1	Body	ASTM A487 Gr. 4 Class D			–
	2	1	Bonnet	4130			–
	3	4	Capscrew socket head, ⅝ UNC × 1.75 (long)	ASTM A574 Alloy Steel	18-8 SS		–
■ ●	4	1	Gate	41XX with QPQ nitriding			2171108-01
				410 SS with QPQ nitriding			2139629-02
■ ●	5	1	Gate clip	3XX SS			M451649
	6	1	Handle	ASTM A536 Gr. 65-45-12			–
	7	1	Handle screw	CD 1018/26			–
	8	12	Heavy hex nut, 1¼-8 UN	ASTM A194 Gr. 2H	ASTM A194 Gr. 7		–
	9	4	Hex head bolt, ¾-10 UNC × 4.00 (long)	SAE steel Gr. 5			–
	10	1	Housing	HR 1018/22			–
	11	1	Lubricating nipple, ⅛ NPT	Steel			–
■	12	1	O-ring, AS-568-218, secondary seal	HNBR			2712425-12
				FKM			J005531-218
■	13	2	O-ring, AS-568-435, wear ring seal	HNBR			2726268-02
				FKM			J005521-435
■ ●	14	1	O-ring, AS-568-446, bonnet seal	HNBR			2712425-78
				FKM			J005521-446
	15	1	Retainer	HR 1018/22	17-4PH SS		–
■	16	1	Rod wiper, housing seal	Urethane			2726191-02-95
■ ●	17	1	Seat assembly	410 SS with QPQ nitriding and HNBR			2139748-01
				410 SS with QPQ nitriding and FKM			2269500-01
	18	1	Sight tube	Clear acrylic			–
■	19	1	Stem	410 SS			J024943-107
	20	1	Stem cap	ASTM A536 Gr. 65-45-12			–
■	21	1	Stem screw	CD 1018/26			J023415
■	22	1	Stem seal assembly with bushing	HNBR and bronze			JN16995-008
				FKM and bronze			JN16995-006
	23	12	Stud (double ended), 1¼-8 UN × 6.25 (long)	ASTM A193 Gr. B7	ASTM A193 Gr. L7		–
■	24	2	Thrust needle roller bearing	Hardened steel			J050911-009
■	25	4	Thrust washer	Hardened steel			J050911-010
■ ●	26	2	Wear ring	41XX with QPQ nitriding			M452619
				410 SS			2139650-02

■ Major repair kit J025177-10574—one each for one year of service.
● Minor repair kit J025177-00574.
Major and minor repair kits listed for trim option J0XXXXX-XX72140 (410 SS stem, 41XX with QPQ gate, and HNBR seat and seals).
Consult Cameron for other repair kit trim options.

Series DM gate valves—5,000-psi WP

2-in [50-mm] seat port

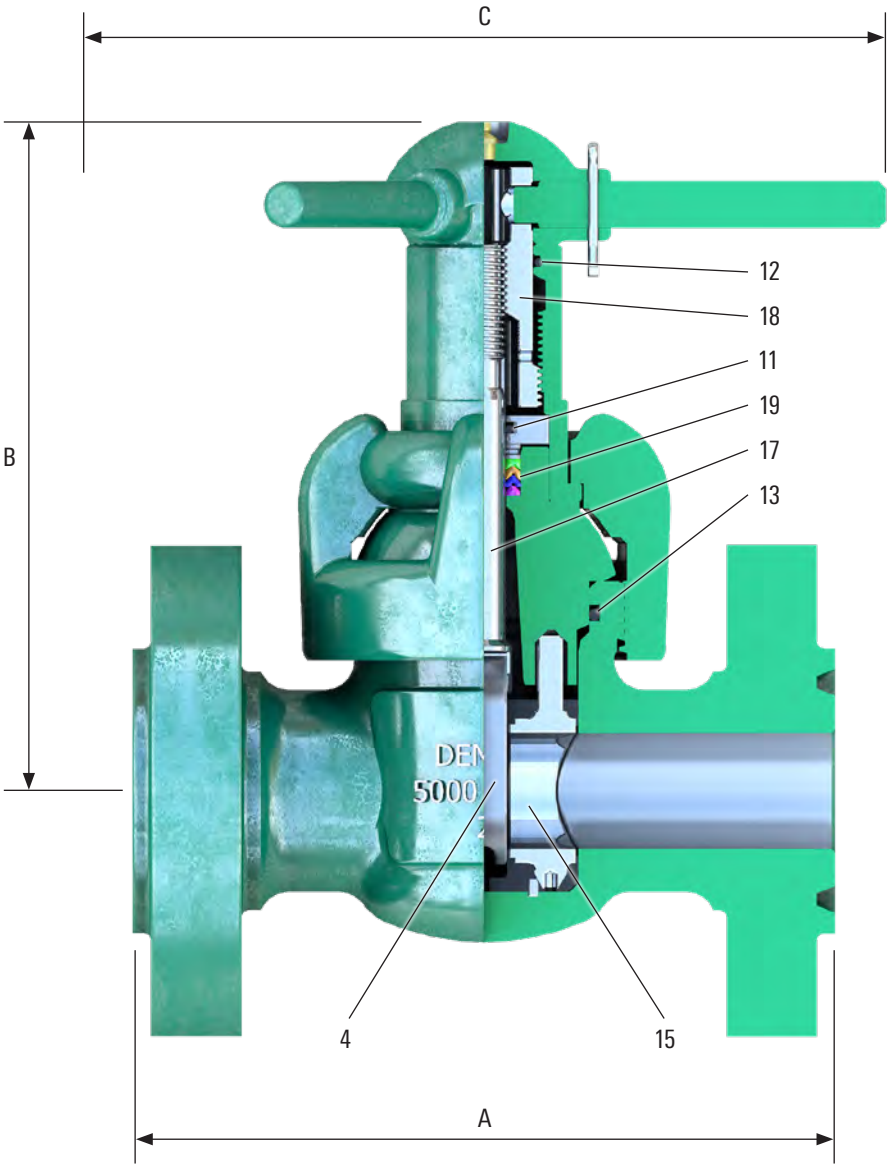

Dimensional Data and Weights		
Dimension	**Valve Seat Port Size for 5,000-psi WP: 2 in [50 mm]**	
A, length, in [mm]	Weld and threaded end	9.00 [229]
	Flanged end	12.12 [308]
	Hammer union end	15.74 [400]
For flanged ends	API ring number	R-24
	Flange ID, in [mm]	2.00 [50]
	Flange OD, in [mm]	8.50 [216]
	Flange bolts, amount; in [mm]	8; ⅞ [22]
Weight, lbm [kg]	Weld and threaded end	58 [26]
	Flanged end	103 [47]
	Hammer union end	77 [35]
Number of handle turns from open to closed		10.2
B, height, center to top (open), in [mm]		13.00 [330]
C, handle diameter, in [mm]		14.00 [356]

Assembly Part Number Example

J024929-2782110

Assembly Base Number
2 in [50 mm]

Ring groove inlay
Seat and seal elastomer
Seat insert material
Gate material
Stem material
End connection

End Connection	
No.	**Description**
Flanged	
2	5,000 RTJ
Weld	
1	Sch. 80
2	XXH
5	Sch. 160
Threaded	
0	LP
2	UPTBG
Hammer union	
9	2.00-in [50-mm] XXH 1502 hammer union

Body Configuration	
No.	**Description**
4	Threaded
5	Weld
7	Flanged
9	Hammer union

Stem Material	
No.	**Description**
8	316 SS

Gate Material	
No.	**Description**
2	41XX
8	ASTM A351 Gr. CF8M

Seat Insert Material	
No.	**Description**
1	1045
8	ASTM A351 Gr. CF8M

Seat and Seal Elastomer	
No.	**Description**
1	Buna-N and Buna-N
2	FKM and FKM

Ring Groove Inlay	
No.	**Description**
0	–
1	316 SS inlay†
2	625 SS inlay†

† Inlay only available on flanged valves.

Parts List

Repair Kit	Key No.	Qty.	Description	Valve Seat Port Size for 5,000-psi WP: 2 in [50 mm]	Repair Kit Component Part Numbers
			Assembly Base Number—NACE Compliant		
			2-in [50-mm] nominal end—threaded, flanged, weld, and hammer	**J024929**	
			2.50-in [65-mm] nominal end—weld	**J025205**	
	1	1	Body	ASTM A105 for Threaded, weld, and hammer	–
				ASTM A487 Gr. 4 Class A for Flanged	–
	2	1	Bonnet	ASTM A105	–
	3	1	Coupling	ASTM A487 Gr. 4 Class A	–
■ ●	4	1	Gate	41XX with electroless nickel plating (ENP)	J001887-002
				ASTM A351 Gr. CF8M	J001887-108
	5	1	Handle	ASTM A536 Gr. 65-45-12	–
	6	1	Housing	CD 1018	–
	7	1	Index pin	Steel	–
	8	1	Lock handle	CD 1213/15	–
	9	1	Lock screw	Steel	–
	10	1	Lubricating nipple, ⅛ NPT	Steel	–
■	11	1	O-ring, AS-568-210, secondary seal	Buna-N	J005526-210
■	12	1	O-ring, AS-568-224, housing seal	Buna-N	J005526-224
■ ●	13	1	O-ring, AS-568-342, bonnet seal	Buna-N	J005526-342
				FKM	J005531-342
	14	1	Retainer	CD 1213/15	–
■ ●	15	1	Seat assembly	1045 and Buna-N	J001876-011
				1045 and FKM	J001876-012
				ASTM A351 Gr. CF8M and Buna-N	J001876-081
				ASTM A351 Gr. CF8M and FKM	J001876-082
	16	1	Split pin, 3⁄16 × 1¾	Steel	–
■	17	1	Stem	316 SS	J001931-008
■	18	1	Stem screw	CD 1213/15	J001913
■	19	1	Stem seal assembly with bushing	Buna-N and bronze	JN01949-001
				FKM and bronze	JN01949-006

■ Major repair kit J025216-11221—one each for one year of service.
● Minor repair kit J025216-01221.
Major and minor repair kits listed for trim option J0XXXXX-XX82110 (316 SS stem, 41XX with ENP gate, and 1045 Buna-N seat and seals).
Consult Cameron for other repair kit trim options.

Series DM gate valves—5,000-psi WP

3-in [80-mm] seat port

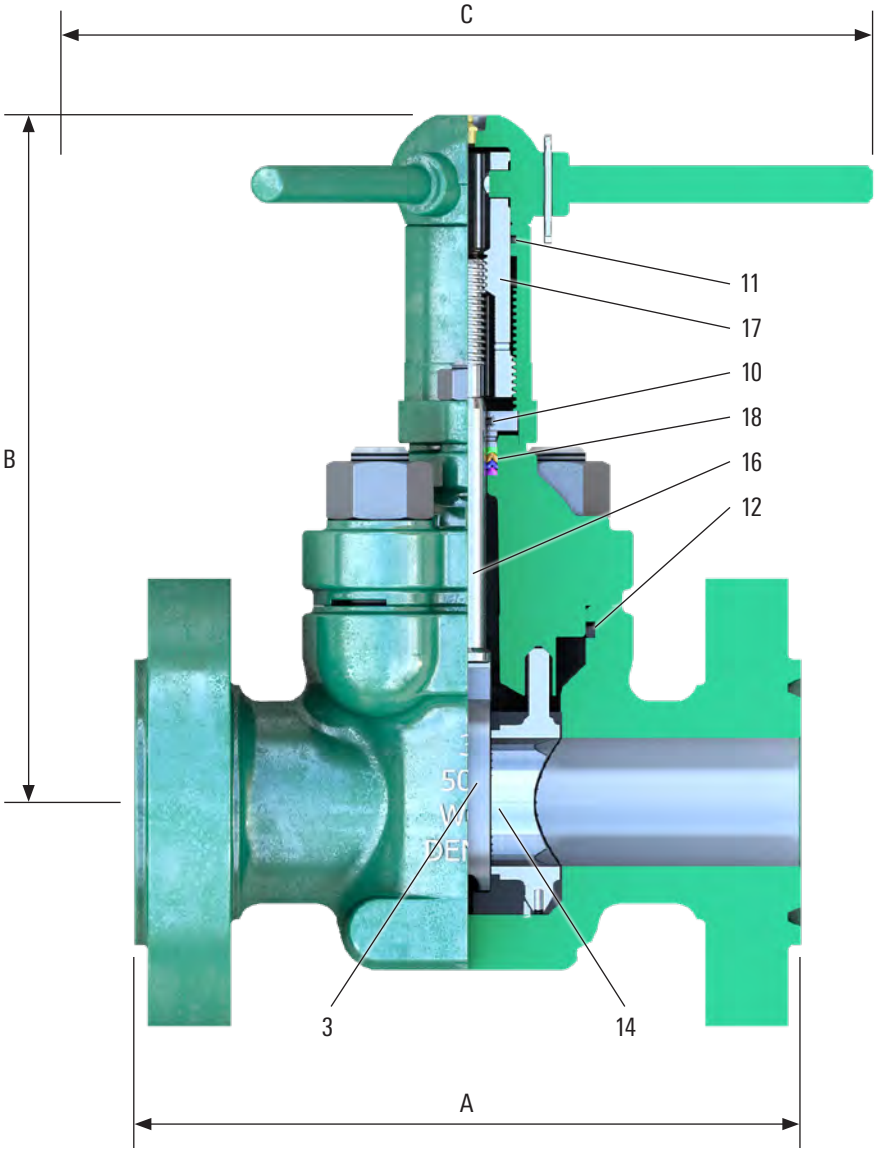

Dimensional Data and Weights			
Dimension	**Valve Seat Port Size for 5,000-psi WP: 3 in [80 mm]**		
A, length, in [mm]	Weld and threaded end		11.00 [279]
	Flanged end		15.63 [397]
	Hammer union end	4 in	16.88 [429]
		3 in	22.62 [574]
For flanged ends	API ring number		R-35
	Flange ID, in [mm]		3.00 [80]
	Flange OD, in [mm]		10.50 [267]
	Flange bolts, amount; in [mm]		8; 1⅛ [29]
Weight, lbm [kg]	Weld and threaded end		158 [72]
	Flanged end		239 [109]
	Hammer union end	4 in	178 [81]
		3 in	185 [84]
Number of handle turns from open to closed			11.0
B, height, center to top (open), in [mm]			18.00 [457]
C, handle diameter, in [mm]			19.00 [483]

Assembly Part Number Example

J025119-2788811

Assembly Base Number
3 in [80 mm]

Ring groove inlay
Seat and seal elastomer
Seat insert material
Gate material
Stem material
End connection

End Connection	
No.	**Description**
Flanged	
2	5,000 RTJ
Weld	
1	Sch. 80
2	XXH
5	Sch. 160
Threaded	
0	LP
1	TBS
Hammer union	
8	3.00-in [50-mm] XXH 1502 hammer union
9	4.00-in [100-mm] XXH 1502 hammer union

Body Configuration	
No.	**Description**
4	Threaded
5	Weld
7	Flanged
9	Hammer union

Stem Material	
No.	**Description**
8	316 SS

Gate Material	
No.	**Description**
2	41XX
8	ASTM A351 Gr. CF8M

Seat Insert Material	
No.	**Description**
1	1045
8	ASTM A351 Gr. CF8M

Seat and Seal Elastomer	
No.	**Description**
1	Buna-N and Buna-N
2	FKM and FKM

Ring Groove Inlay	
No.	**Description**
0	–
1	316 SS inlay†
2	625 SS inlay†

† Inlay only available on flanged valves.

Parts List

Repair Kit	Key No.	Qty.	Description	Valve Seat Port Size for 5,000-psi WP: 3 in [80 mm]	Repair Kit Component Part Numbers
			Assembly Base Number—NACE Compliant		
			3-in [80-mm] nominal end—threaded, flanged, weld, and hammer	**J025119**	
			4-in [100-mm] nominal end—weld	**J025116**	
	1	1	Body	ASTM A487 Gr. 4 Class D	–
	2	1	Bonnet	ASTM A487 Gr. 4 Class D	–
■ ●	3	1	Gate	41XX with ENP	J001886-002
				ASTM A351 Gr. CF8M	J001886-108
	4	1	Handle	ASTM A536 Gr. 65-45-12	–
	5	4	Heavy hex nut, 1⅜-8 UN	ASTM A194 Gr. 2H	–
	6	2	Heavy hex nut, ¾-10 UNC	ASTM A194 Gr. 2H	–
	7	1	Housing	ASTM A350 Gr. LF2 Class 1	–
	8	1	Lock handle	CD 1213/15	–
	9	1	Lubricating nipple, ⅛ NPT	Steel	–
■	10	1	O-ring, AS-568-212, secondary seal	Buna-N	J005526-212
■	11	1	O-ring, AS-568-226, housing seal	Buna-N	J005526-226
■ ●	12	1	O-ring, AS-568-433, bonnet seal	Buna-N	J005526-433
				FKM	J005531-433
	13	1	Retainer	CD 1213/15	–
■ ●	14	1	Seat assembly	1045 and Buna-N	J001878-011
				1045 and FKM	J001878-012
				ASTM A351 Gr. CF8M and Buna-N	J001878-081
				ASTM A351 Gr. CF8M and FKM	J001878-082
	15	1	Split pin, 3⁄16 × 1¾	Steel	–
■	16	1	Stem	316 SS	J001932-008
■	17	1	Stem screw	CD 1213/15	J001914-003
■	18	1	Stem seal assembly with bushing	Buna-N and bronze	JN01950-001
				FKM and bronze	JN01950-006
	19	2	Stud (continuous), ¾-10 UNC × 2.88 (long)	ASTM A193 Gr. B7	–
	20	4	Stud (double ended), 1⅜-8 UN × 5.25 (long)	ASTM A193 Gr. B7	–

■ Major repair kit J025216-12221—one each for one year of service.
● Minor repair kit J025216-02221.
Major and minor repair kits listed for trim option J0XXXXX-XX82110 (316 SS stem, 41XX with ENP gate, and 1045 Buna-N seat and seals).
Consult Cameron for other repair kit trim options.

Series DM gate valves—5,000-psi WP

4-in [100-mm] seat port

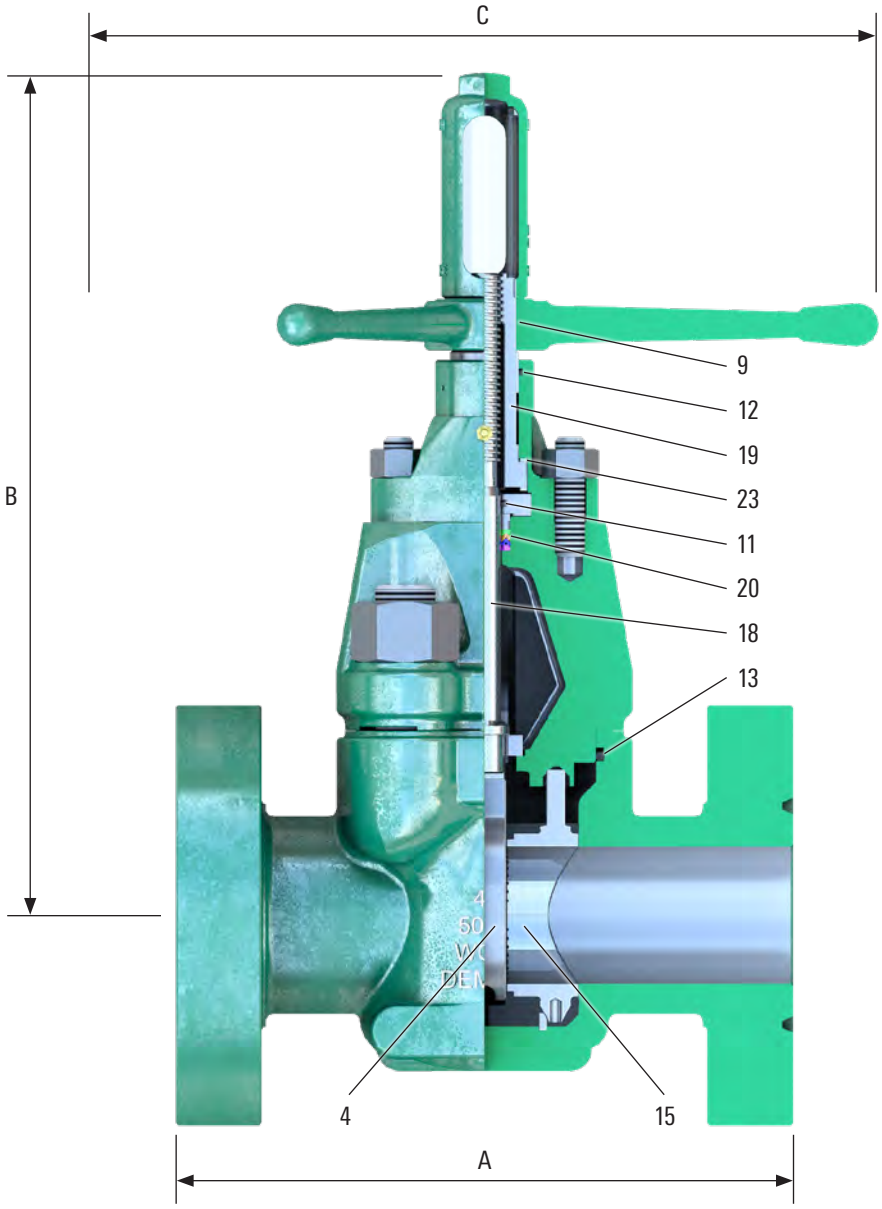

Dimensional Data and Weights			
Dimension	**Valve Seat Port Size for 5,000-psi WP: 4 in [100 mm]**		
A, length, in [mm]	Weld and threaded end		13.00 [330]
	Flanged end		18.00 [457]
	Hammer union end	5 in	22.62 [574]
		4 in	24.62 [625]
For flanged ends	API ring number		R-39
	Flange ID, in [mm]		4.00 [100]
	Flange OD, in [mm]		12.25 [311]
	Flange bolts, amount; in [mm]		8; 1¼ [32]
Weight, lbm [kg]	Weld and threaded end		236 [107]
	Flanged end		373 [169]
	Hammer union end	5 in	332 [151]
		4 in	328 [149]
Number of handle turns from open to closed			22.9
B, height, center to top (open), in [mm]			24.57 [624]
C, handle diameter, in [mm]			23.00 [584]

Assembly Part Number Example

J025206-2 7 8 2 1 2 1

Assembly Base Number
4 in [100 mm]

Ring groove inlay
Seat and seal elastomer
Seat insert material
Gate material
Stem material
End connection

End Connection	
No.	**Description**
Flanged	
2	5,000 RTJ
Weld	
1	Sch. 80
2	XXH
5	Sch. 160
Threaded	
0	LP
1	TBS
Hammer union	
8	4.00-in [100-mm] XXH 1502 hammer union
9	5.00-in [125-mm] XXH 1502 hammer union

Body Configuration	
No.	**Description**
4	Threaded
5	Weld
7	Flanged
9	Hammer union

Stem Material	
No.	**Description**
8	316 SS

Gate Material	
No.	**Description**
2	41XX
8	ASTM A351 Gr. CF8M

Seat Insert Material	
No.	**Description**
1	1045
8	ASTM A351 Gr. CF8M

Seat and Seal Elastomer	
No.	**Description**
1	Buna-N and Buna-N
2	FKM and FKM

Ring Groove Inlay	
No.	**Description**
0	–
1	316 SS inlay†
2	625 SS inlay†

† Inlay only available on flanged valves.

Parts List

Repair Kit	Key No.	Qty.	Description	Valve Seat Port Size for 5,000-psi WP: 4 in [100 mm]	Repair Kit Component Part Numbers
			Assembly Base Number—NACE Compliant		
			4-in [100-mm] nominal end—threaded, flanged, weld, and hammer	**J025206**	
			5-in [125-mm] nominal end—weld and hammer	**J025118**	
			6-in [150-mm] nominal end—weld	**J025220**	
	1	1	Body	ASTM A487 Gr. 4 Class D	–
	2	1	Bonnet	ASTM A487 Gr. 4 Class D	–
	3	1	Downstop ring	303 SS	–
■ ●	4	1	Gate	41XX with ENP	J001926-002
				ASTM A351 Gr. CF8M	J001926-108
	5	1	Handle	ASTM A536 Gr. 65-45-12	–
	6	4	Heavy hex nut, 1¾ special	ASTM A194 Gr. 2H	–
	7	2	Heavy hex nut, ⅞-9 UNC	ASTM A194 Gr. 2H	–
	8	1	Housing	HR 1018	–
■	9	1	Key	Steel	J005305-10016
	10	1	Lubricating nipple, ⅛ NPT	Steel	–
■	11	1	O-ring, AS-568-214, secondary seal	Buna-N	J005526-214
■	12	1	O-ring, AS-568-226, housing seal	Buna-N	J005526-226
■ ●	13	1	O-ring, AS-568-439, bonnet seal	Buna-N	J005520-439
				FKM	J005531-439
	14	1	Retainer	CD 1213/15	–
■ ●	15	1	Seat assembly	1045 and Buna-N	J002207-021
				1045 and FKM	J002207-022
				ASTM A351 Gr. CF8M and Buna-N	J002207-081
				ASTM A351 Gr. CF8M and FKM	J002207-082
	16	1	Sight tube	Clear acrylic	–
	17	1	Stem cap	ASTM A536 Gr. 65-45-12	–
■	18	1	Stem	316 SS	J007439-008
■	19	1	Stem screw	CD 1213/15	J007416
■	20	1	Stem seal assembly with bushing	Buna-N and bronze	JN01951-001
				FKM and bronze	JN01951-006
	21	2	Stud (continuous), ⅞-9 UN × 3.50 (long)	ASTM A193 Gr. B7	–
	22	4	Stud (double ended), 1¾ special × 6.00 (long)	ASTM A193 Gr. B7	–
■	23	2	Thrust washer	Teflon and phenolic material	J007426

■ Major repair kit J025216-14221—one each for one year of service.
● Minor repair kit J025216-04221.
Major and minor repair kits listed for trim option J0XXXXX-XX82110 (316 SS stem, 41XX with ENP gate, and 1045 Buna-N seat and seals).
Consult Cameron for other repair kit trim options.

Series DM gate valves—5,000-psi WP

5.12-in [130-mm] seat port

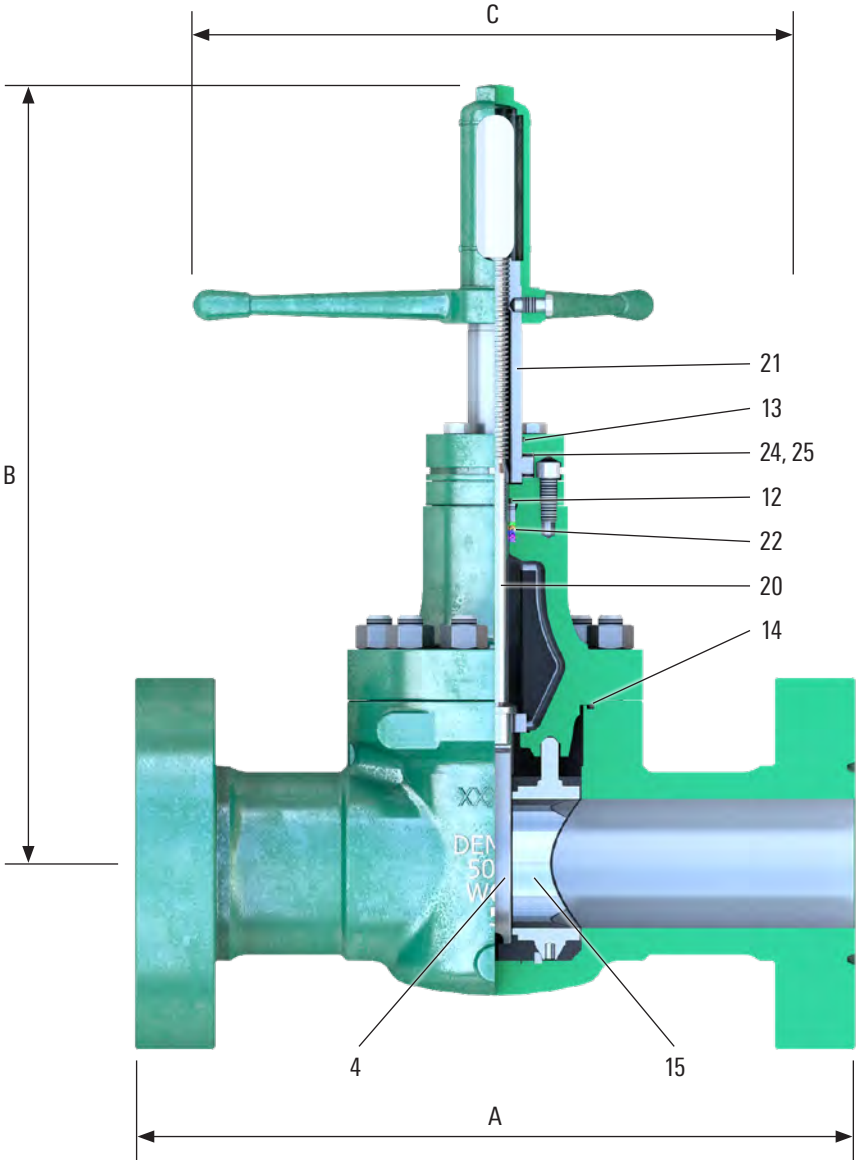

Dimensional Data and Weights		
Dimension	**Valve Seat Port Size for 5,000-psi WP: 5.12 in [130 mm]**	
A, length, in [mm]	Weld and threaded end	16.00 [406]
	Flanged end	28.62 [727]
For flanged ends	API ring number	R-44
	Flange ID, in [mm]	5.12 [130]
	Flange OD, in [mm]	14.75 [375]
	Flange bolts, amount; in [mm]	8; 1½ [38]
Weight, lbm [kg]	Weld end	329 [149]
	Flanged end	611 [277]
Number of handle turns from open to closed		29.6
B, height, center to top (open), in [mm]		30.93 [786]
C, handle diameter, in [mm]		24.00 [610]

Assembly Part Number Example

J025317-7788120

Assembly Base Number

Ring groove inlay
Seat and seal elastomer
Seat insert material
Gate material
Stem material
End connection

End Connection	
No.	**Description**
Flanged	
7	5,000 RTJ
Weld	
2	XXH
5	Sch. 160
Threaded	
3	LC

Body Configuration	
No.	**Description**
4	Threaded
5	Weld
7	Flanged

Stem Material	
No.	**Description**
8	17-4PH SS

Gate Material	
No.	**Description**
2	41XX
8	ASTM A487 Gr. CA15 Class C

Seat Insert Material	
No.	**Description**
1	1045
8	ASTM A487 Gr. CA15 Class C

Seat and Seal Elastomer	
No.	**Description**
1	Buna-N and Buna-N
2	FKM and FKM

Ring Groove Inlay	
No.	**Description**
0	–
1	316 SS inlay†
2	625 SS inlay†

† Inlay only available on flanged valves.

Parts List

Repair Kit	Key No.	Qty.	Description	Valve Seat Port Size for 5,000-psi WP: 5.12 in [130 mm]	Repair Kit Component Part Numbers
			Assembly Base Number—NACE Compliant		
			5-in [125-mm] nominal end—threaded and flanged	**J025317**	
			6-in [150-mm] nominal end—weld	**J025326**	
	1	1	Body	ASTM A487 Gr. 4 Class D	–
	2	1	Bonnet	ASTM A487 Gr. 4 Class D	–
	3	1	Downstop ring	303 SS	–
	4	4	Capscrew socket head, ⅝ UNC × 1.75 (long)	ASTM A574 Alloy Steel	–
■ ●	5	1	Gate	41XX with ENP	J021952-002
				ASTM A487 Gr. CA15 Class C	J021952-108
	6	1	Handle	ASTM A536 Gr. 65-45-12	–
	7	1	Handle screw	CD 1018/26	–
	8	12	Heavy hex nut, 1-8 UNC	ASTM A194 Gr. 2H	–
	9	4	Hex head bolt, ⅝-11 UNC × 3.50 (long)	SAE steel Gr. 2	–
	10	1	Housing	HR 1018/22	–
	11	1	Lubricating nipple, ⅛ NPT	Steel	–
■	12	1	O-ring, AS-568-216, secondary seal	Buna-N	J005526-216
■	13	1	O-ring, AS-568-228, housing seal	Buna-N	J005526-228
■ ●	14	1	O-ring, AS-568-367, bonnet seal	Buna-N	J005520-367
				FKM	J005531-367
	15	1	Relief fitting, ⅛ NPT	Steel	–
	16	1	Retainer	HR 1018/22	–
■ ●	17	1	Seat assembly	1045 and Buna-N	J021948-019
				1045 and FKM	J021948-012
				ASTM A487 Gr. CA15 Class C and Buna-N	J021948-099
				ASTM A487 Gr. CA15 Class C and FKM	J021948-092
	18	1	Sight tube	Clear acrylic	–
	19	1	Stem cap	ASTM A536 Gr. 65-45-12	–
■	20	1	Stem	17-4PH SS	J021943-009
■	21	1	Stem screw	CD 1018/26	J019159
■	22	1	Stem seal assembly with bushing	Buna-N and bronze	J015853-001
				FKM and bronze	J015853-006
	23	12	Stud (double ended), 1-8 UNC × 4.50 (long)	ASTM A193 Gr. B7	–
■	24	2	Thrust needle roller bearing	Hardened steel	J050911-005
■	25	4	Thrust washer	Hardened steel	J050911-006

■ Major repair kit J025216-15221—one each for one year of service.
● Minor repair kit J025216-05221.
Major and minor repair kits listed for trim option J0XXXXX-XX82110 (17-4PH SS stem, 41XX with ENP gate, and 1045 Buna-N seat and seals).
Consult Cameron for other repair kit trim options.

Series DM gate valves—ASME Class 600

1.62- to 6-in [40- to 150-mm] seat port

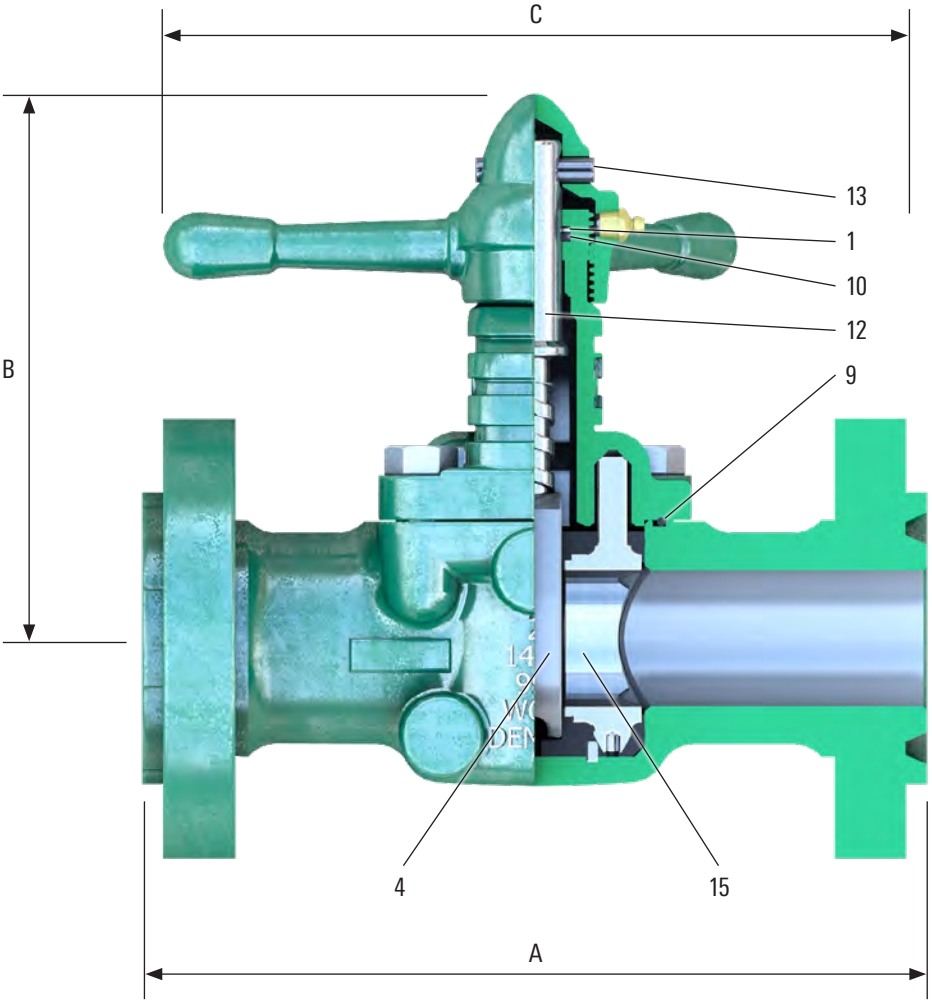

Dimensional Data and Weights

Dimension		Valve Seat Port Sizes for ASME 600 Class, in [mm]						
		1.62 [40] with 1.50 [40] Threaded Ends	2 [50]	2.50 [65]	3 [80]	4 [100]	6 [150]	6 [150] with 8 [200] Flanges
A, length, in [mm]	Weld, threaded, and grooved end	7.75 [197]	8.88 [226]	10.00 [254]	10.25 [260]	11.88 [302]	15.50 [394]	–
	Flanged RF end	–	11.50 [292]	13.00 [330]	14.00 [356]	17.00 [432]	22.00 [559]	26.00 [660]
	Flanged RTJ end	–	11.62 [295]	13.12 [333]	14.12 [359]	17.12 [435]	22.12 [562]	26.12 [663]
For flanged ends	API ring number	–	R-23	R-26	R-31	R-37	R-45	R-49
	Flange ID, in [mm]	–	2.00 [50]	2.50 [65]	3.00 [80]	4.00 [100]	6.00 [150]	8.00 [200]
	Flange OD, in [mm]	–	6.50 [165]	7.50 [191]	8.25 [210]	10.75 [273]	14.00 [356]	16.50 [419]
	Flange bolts, amount; in [mm]	–	8; ⅝ [16]	8; ¾ [19]	8; ¾ [19]	8; ⅞ [22]	12; 1 [25]	12; 1⅛ [29]
Weight, lbm [kg]	Weld, threaded, and grooved end	20 [9]	26 [12]	50 [23]	60 [27]	98 [44]	310 [141]	–
	Flanged end	–	44 [20]	74 [34]	96 [44]	176 [80]	428 [194]	590 [268]
B, height, center to top (open), in [mm]		7.75 [197]	8.75 [222]	10.62 [270]	11.38 [289]	13.88 [353]	19.25 [489]	19.25 [489]
C, handle diameter, in [mm]		9.50 [241]	11.00 [279]	12.62 [321]	12.62 [321]	14.25 [362]	24.00 [610]	24.00 [610]

Assembly Part Number Example

J001072-2722110

Assembly Base Number
2 in [50 mm]

Ring groove inlay
Seat and seal elastomer
Seat insert material
Gate material
Stem material
End connection

End Connection	
No.	**Description**
Flanged	
2	600 RTJ
3	600 RF
Weld	
0	Sch. 40
Threaded	
0	LP
1	TBG
2	UPTBG
Grooved	
0	Sch. 80

Body Configuration	
No.	**Description**
4	Threaded
5	Weld
6	Grooved
7	Flanged

Stem Material	
No.	**Description**
2	303 SS
8	316 SS

Gate Material	
No.	**Description**
2	1045
8	ASTM A351 Gr. CF8M

Seat Insert Material	
No.	**Description**
1	1045
8	ASTM A351 Gr. CF8M

Seat and Seal Elastomer	
No.	**Description**
1	Buna-N and Buna-N
2	FKM and FKM

Ring Groove Inlay	
No.	**Description**
0	–
1	316 SS inlay†
2	625 SS inlay†

† Inlay only available on flanged valves.

Parts List

Key No.	Qty.	Description	Valve Seat Port Sizes for ASME 600 Class, in [mm]						
			1.62 [40] with 1.50 [40] Threaded Ends	2 [50]	2.50 [65]	3 [80]	4 [100]	6 [150]	6 [150] with 8 [200] Flanges
		Assembly base number							
		Threaded	J003938	J001072	J001074	J001076	J001078	J001080	–
		Weld	–	J001092	J001094	J001096	J001098	J001100	–
		Grooved	–	J001082	J001084	J001086	J001088	J001090	–
		Flanged	–	J001062	J001064	J001066	J001068	J001070	J003945
1†	1	Backup ring	Chrome leather						
2	1	Body	ASTM A216 Gr. WCB						
3	1	Bonnet	ASTM A216 Gr. WCB						
4†	1	Gate	1045 with ENP						
			ASTM A351 CF8M						
5	1	Handle	ASTM A536 Gr. 65-45-12						
6	4	Heavy hex nut, body	–		ASTM A194 Gr. 2H				
7	4	Hex head bolt, body	SAE Gr. 5		Na				
8	1	Lubricating nipple, ⅛ NPT	Steel						
9†	1	O-ring, bonnet seal	Buna-N						
			FKM						
10†	1	O-ring, stem seal	Buna-N						
			FKM						
11†	1	Seat assembly	1045 and Buna-N						
			1045 and FKM						
			ASTM A351 Gr. CF8M and Buna-N						
			ASTM A351 Gr. CF8M and FKM						
12†	1	Stem	303 SS						
			316 SS						
13†	1	Stem pin	Spring steel						
14	4	Stud (double ended), body	–		ASTM A193 Gr. B7				

† Recommended spare parts. Contact Cameron for specific part numbers.

Series DM gate valves—ASME Class 900

2- to 6-in [50- to 150-mm] seat port

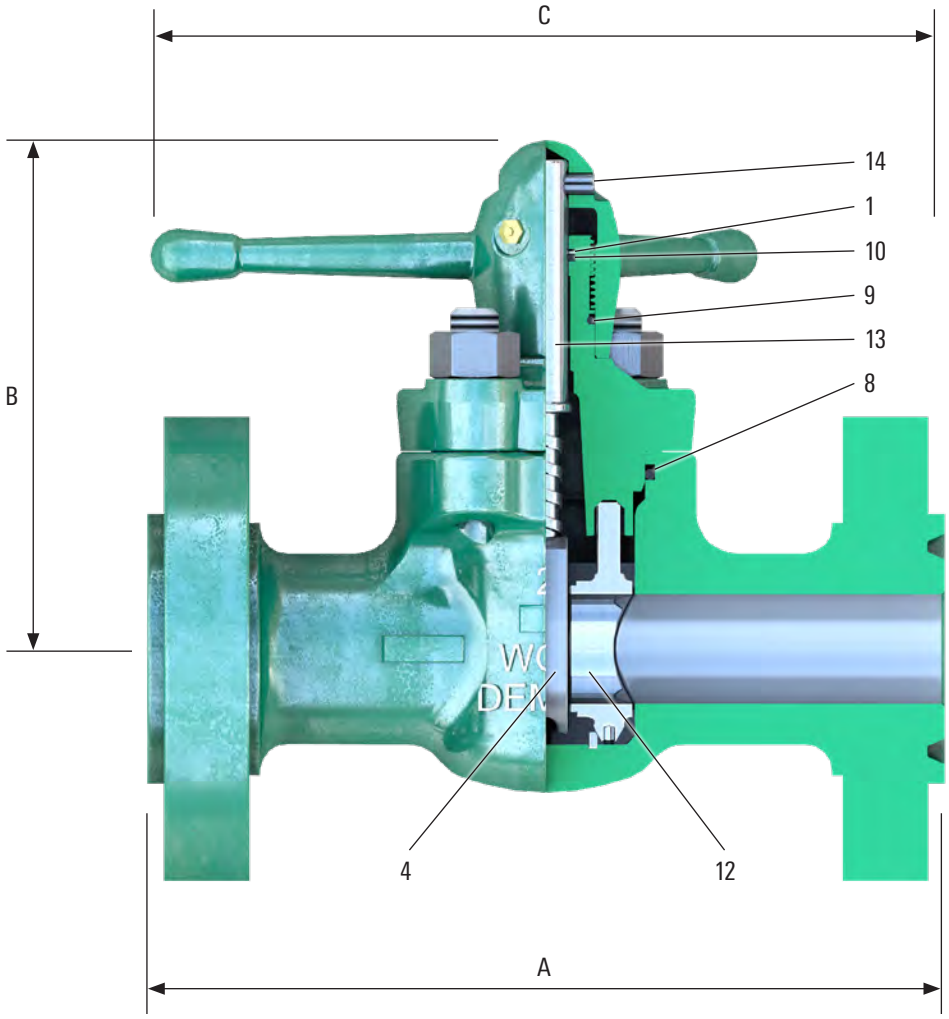

Dimensional Data and Weights						
Dimension		**Valve Seat Port Sizes for ASME 900 Class, in [mm]**				
		2 [50]	**2.50 [65]**	**3 [80]**	**4 [100]**	**6 [150]**
A, length, in [mm]	Weld, threaded, and grooved end	9.00 [229]	9.75 [248]	11.00 [279]	13.00 [330]	20.00 [508]
	Flanged RF end	14.50 [368]	16.50 [419]	15.00 [381]	18.00 [457]	24.00 [610]
	Flanged RTJ end	14.62 [371]	16.62 [422]	15.12 [384]	18.12 [460]	24.12 [613]
For flanged ends	API ring number	R-24	R-27	R-31	R-37	R-45
	Flange ID, in [mm]	2.00 [50]	2.50 [65]	3.00 [80]	4.00 [100]	6.00 [150]
	Flange OD, in [mm]	8.50 [216]	9.62 [244]	9.50 [241]	11.50 [292]	15.00 [381]
	Flange bolts, amount; in [mm]	8; ⅞ [22]	8; 1 [25]	8; ⅞ [22]	8; 1⅛ [19]	12; 1⅛ [19]
Weight, lbm [kg]	Weld, threaded, and grooved end	48 [22]	87 [39]	95 [43]	140 [64]	325 [147]
	Flanged end	100 [45]	170 [77]	160 [73]	230 [104]	540 [245]
B, height, center to top (open), in [mm]		9.88 [251]	22.88 [581]	12.75 [324]	15.00 [381]	19.25 [489]
C, handle diameter, in [mm]		14.50 [368]	19.00 [483]	19.00 [483]	23.00 [584]	24.00 [610]

Assembly Part Number Example

J003947-4782112

Assembly Base Number
2 in [50 mm]

Ring groove inlay
Seat and seal elastomer
Seat insert material
Gate material
Stem material
End connection

End Connection	
No.	**Description**
Flanged	
4	900 RTJ
5	900 RF
Weld	
0	Sch. 40
1	Sch. 80
Threaded	
0	LP
1	TBG
2	UPTBG
Grooved	
0	Sch. 80

Body Configuration	
No.	**Description**
4	Threaded
5	Weld
6	Grooved
7	Flanged

Stem Material	
No.	**Description**
2	303 SS
8	316 SS

Gate Material	
No.	**Description**
2	1045
8	ASTM A351 Gr. CF8M

Seat Insert Material	
No.	**Description**
1	1045
8	ASTM A351 Gr. CF8M

Seat and Seal Elastomer	
No.	**Description**
1	Buna-N and Buna-N
2	FKM and FKM

Ring Groove Inlay	
No.	**Description**
0	–
1	316 SS inlay†
2	625 SS inlay†

† Inlay only available on flanged valves.

Parts List

Key No.	Qty.	Description	Valve Seat Port Sizes for ASME 900 Class, in [mm]				
			2 [50]	2.50 [65]	3 [80]	4 [100]	6 [150]
		Assembly Base Number—General Service	**J003947**	**J003951**	**J003953**	**J003955**	**J003999**
1†	1	Backup ring	Chrome leather				
2	1	Body	ASTM A487 Gr. 4 Class A				
3	1	Bonnet	ASTM A487 Gr. 4 Class A				
4†	1	Gate	1045 with ENP				
			ASTM A351 CF8M				
5	1	Handle	ASTM A536 Gr. 65-45-12				
6	4	Heavy hex nut, body	ASTM A194 Gr. 2H				
7	1	Lubricating nipple, ⅛ NPT	Steel				
8†	1	O-ring, bonnet seal	Buna-N				
			FKM				
9†	1	O-ring, screw seal	Buna-N				
10†	1	O-ring, stem seal	Buna-N				
			FKM				
11	1	Relief fitting, ⅛ NPT	Steel				
12†	1	Seat assembly	1045 and Buna-N				
			1045 and FKM				
			ASTM A351 Gr. CF8M and Buna-N				
			ASTM A351 Gr. CF8M and FKM				
13†	1	Stem	303 SS				
			316 SS				
14†	1	Stem pin	Spring steel				
15	4	Stud (double ended), body	ASTM A193 Gr. B7				

† Recommended spare parts. Contact Cameron for specific part numbers.

Series DM gate valves—ASME Class 1500

2- to 3-in [50- to 80-mm] seat port

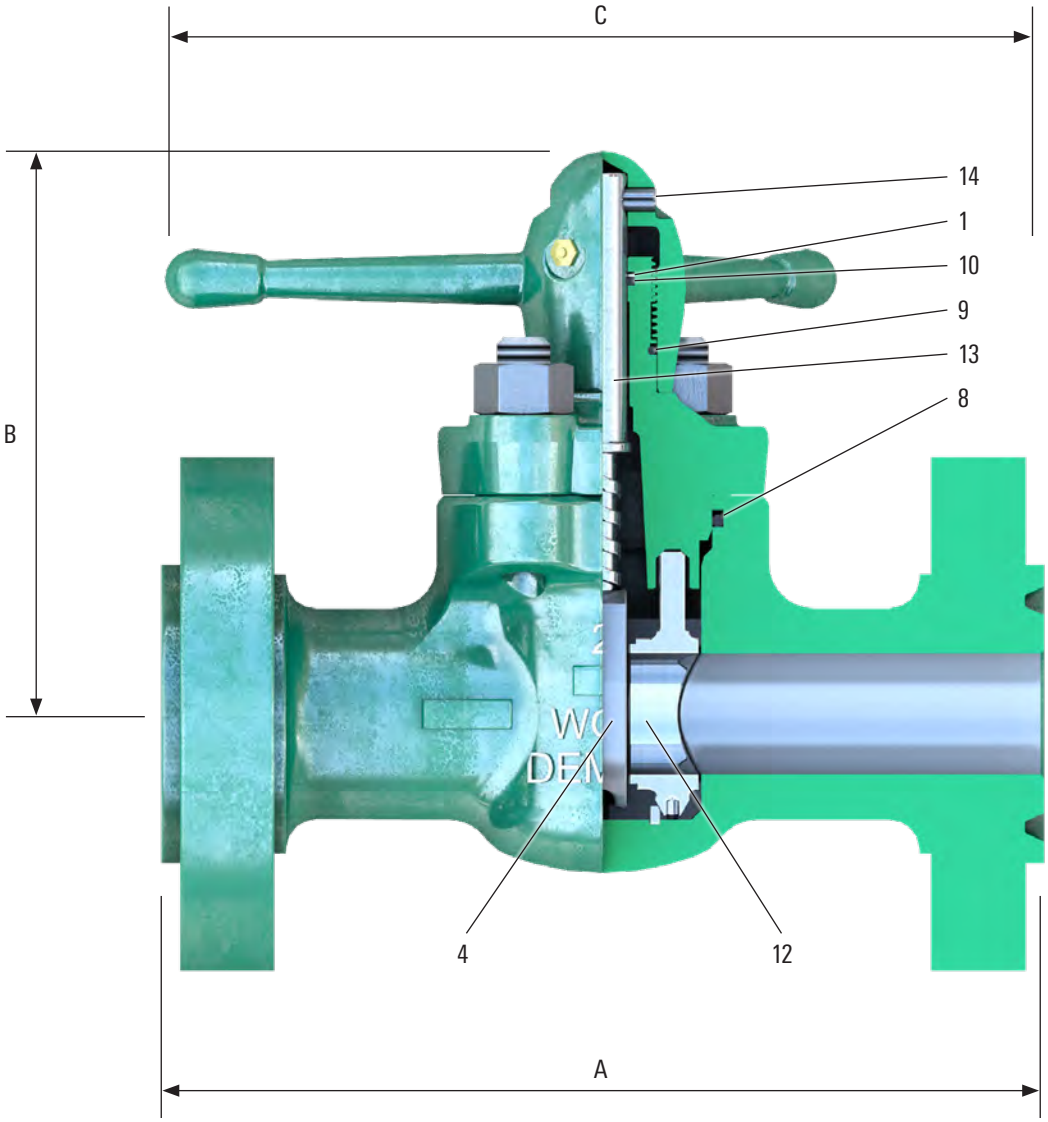

Dimensional Data and Weights				
Dimension		**Valve Seat Port Sizes for ASME 1500 Class, in [mm]**		
		2 [50]	**2.50 [65]**	**3 [80]**
A, length, in [mm]	Weld, threaded, and grooved end	9.00 [229]	9.75 [248]	11.00 [279]
	Flanged RF end	14.50 [368]	16.50 [419]	18.50 [470]
	Flanged RTJ end	14.62 [371]	16.62 [422]	18.62 [473]
For flanged ends	API ring number	R-24	R-27	R-35
	Flange ID, in [mm]	2.00 [50]	2.50 [65]	3.00 [80]
	Flange OD, in [mm]	8.50 [216]	9.62 [244]	10.50 [267]
	Flange bolts, amount; in [mm]	8; ⅞ [22]	8; 1 [25]	8; 1⅛ [29]
Weight, lbm [kg]	Weld, threaded, and grooved end	48 [22]	87 [39]	113 [51]
	Flanged end	100 [45]	170 [77]	205 [93]
B, height, center to top (open), in [mm]		9.88 [25]	22.88 [581]	12.75 [324]
C, handle diameter, in [mm]		14.50 [368]	19.00 [483]	19.00 [483]

Assembly Part Number Example

J003948-6 7 2 8 8 1 1

Assembly Base Number
2 in [50 mm], flanged

- Ring groove inlay
- Seat and seal elastomer
- Seat insert material
- Gate material
- Stem material
- End connection

End Connection	
No.	**Description**
Flanged	
6	1500 RTJ
7	1500 RF
Weld	
0	Sch. 40
1	Sch. 80
5	Sch. 160
Threaded	
0	LP
1	TBG
2	UPTBG
Grooved	
0	Sch. 80

Body Configuration	
No.	**Description**
4	Threaded
5	Weld
6	Grooved
7	Flanged

Stem Material	
No.	**Description**
2	303 SS
8	316 SS

Gate Material	
No.	**Description**
2	1045
8	ASTM A351 Gr. CF8M

Seat Insert Material	
No.	**Description**
1	1045
8	ASTM A351 Gr. CF8M

Seat and Seal Elastomer	
No.	**Description**
1	Buna-N and Buna-N
2	FKM and FKM

Ring Groove Inlay	
No.	**Description**
0	–
1	316 SS inlay†
2	625 SS inlay†

† Inlay only available on flanged valves.

Parts List

Key No.	Qty.	Description	Valve Seat Port Sizes for ASME 1500 Class, in [mm]		
			2 [50]	2.50 [65]	3 [80]
		Assembly Base Number—General Service	**J003948**	**J003952**	**J003957**
1†	1	Backup ring	Chrome leather		
2	1	Body	ASTM A487 Gr. 4 Class A		
3	1	Bonnet	ASTM A487 Gr. 4 Class A		
4†	1	Gate	1045 with ENP		
			ASTM A351 CF8M		
5	1	Handle	ASTM A536 Gr. 65-45-12		
6	4	Heavy hex nut, body	ASTM A194 Gr. 2H		
7	1	Lubricating nipple, ⅛ NPT	Steel		
8†	1	O-ring, bonnet seal	Buna-N		
			FKM		
9†	1	O-ring, screw seal	Buna-N		
10†	1	O-ring, stem seal	Buna-N		
			FKM		
11	1	Relief fitting, ⅛ NPT	Steel		
12†	1	Seat assembly	1045 and Buna-N		
			1045 and FKM		
			ASTM A351 Gr. CF8M and Buna-N		
			ASTM A351 Gr. CF8M and FKM		
13†	1	Stem	303 SS		
			316 SS		
14†	1	Stem pin	Spring steel		
15	4	Stud (double ended), body	ASTM A193 Gr. B7		

† Recommended spare parts. Contact Cameron for specific part numbers.

Series DM gate valves—ASME Class 1500

4-in [100-mm] seat port

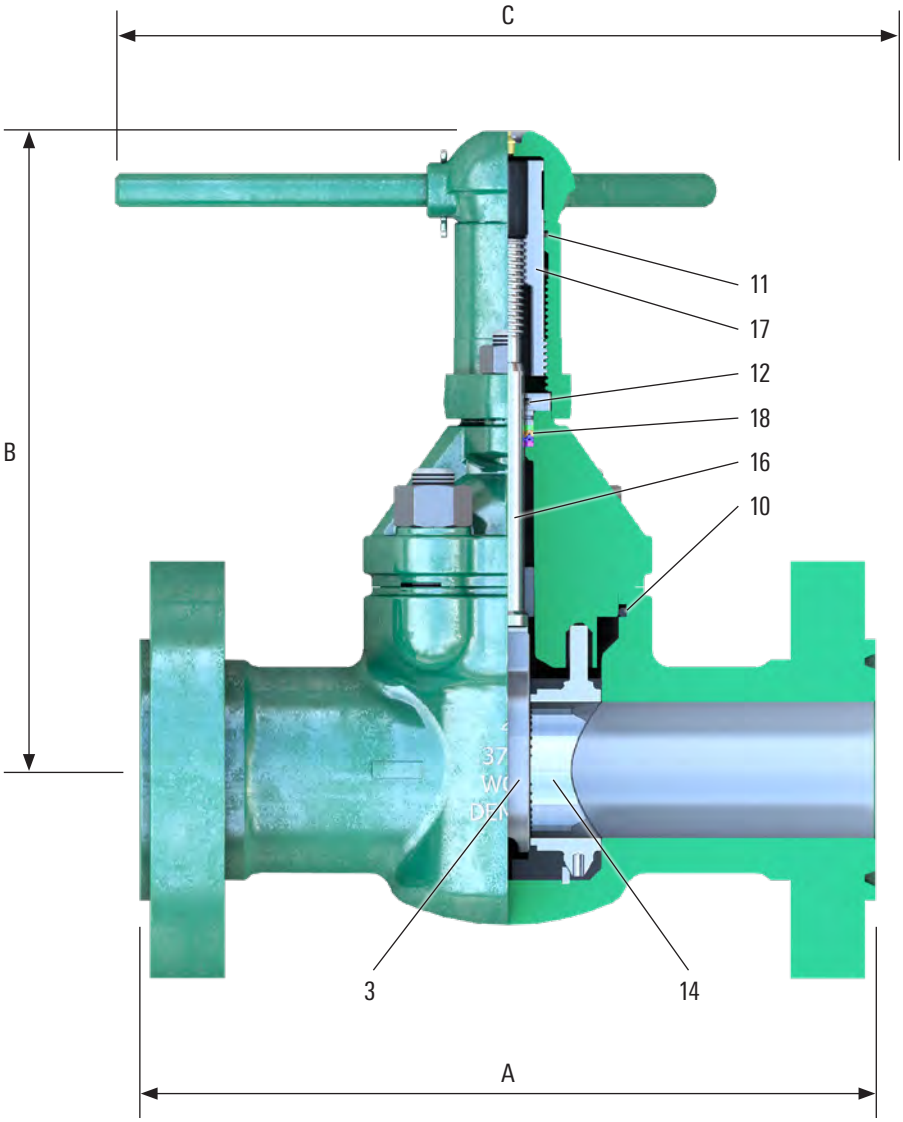

Dimensional Data and Weights		
Dimension	**Valve Seat Port Size for ASME 1500 Class: 4 in [100 mm]**	
A, length, in [mm]	Weld, and threaded end	13.00 [330]
	Flanged RF end	21.50 [546]
	Flanged RTJ end	21.62 [549]
For flanged ends	API ring number	R-39
	Flange ID, in [mm]	4.00 [100]
	Flange OD, in [mm]	12.25 [311]
	Flange bolts, amount; in [mm]	8; 1¼ [32]
Weight, lbm [kg]	Weld, and threaded end	162 [73]
	Flanged end	320 [145]
B, height, center to top (open), in [mm]		21.25 [540]
C, handle diameter, in [mm]		23.00 [854]

Assembly Part Number Example

J003948-6722122

Assembly Base Number
4 in [100 mm]

Ring groove inlay
Seat and seal elastomer
Seat insert material
Gate material
Stem material
End connection

End Connection	
No.	**Description**
Flanged	
6	1500 RTJ
7	1500 RF
Weld	
0	Sch. 40
1	Sch. 80
5	Sch. 160
Threaded	
0	LP
3	LCSG

Body Configuration	
No.	**Description**
4	Threaded
5	Weld
7	Flanged

Stem Material	
No.	**Description**
2	303 SS
8	316 SS

Gate Material	
No.	**Description**
2	41XX
8	ASTM A351 Gr. CF8M

Seat Insert Material	
No.	**Description**
1	1045
8	ASTM A351 Gr. CF8M

Seat and Seal Elastomer	
No.	**Description**
1	Buna-N and Buna-N
2	FKM and FKM

Ring Groove Inlay	
No.	**Description**
0	–
1	316 SS inlay†
2	625 SS inlay†

† Inlay only available on flanged valves.

Parts List

Key No.	Qty.	Description	Valve Seat Port Size for ASME 1500 Class: 4 in [100 mm]
		Assembly Base Number—General Service	**J003010**
1	1	Body	ASTM A487 Gr. 4 Class A
2	1	Bonnet	ASTM A487 Gr. 4 Class A
3†	1	Gate	41XX with ENP
			ASTM A351 Gr. CF8M
4	1	Handle	ASTM A536 Gr. 65-45-12
5	4	Heavy hex nut, body	ASTM A194 Gr. 2H
6	2	Heavy hex nut, bonnet	ASTM A194 Gr. 2H
7	1	Housing	CD 1029
8	1	Lock handle	CD 1213/15
9	1	Lubricating nipple, ⅛ NPT	Steel
10†	1	O-ring, bonnet seal	Buna-N
			FKM
11†	1	O-ring, housing seal	Buna-N
12†	1	O-ring, secondary seal	Buna-N
13	1	Retainer	CD 1213/15
14†	1	Seat assembly	1045 and Buna-N
			1045 and FKM
			ASTM A351 Gr. CF8M and Buna-N
			ASTM A351 Gr. CF8M and FKM
15	1	Split pin, 3⁄16 in × 1¾ in	Steel
16†	1	Stem	303 SS
			316 SS
17†	1	Stem screw	CD 1213/15
18†	1	Stem seal assembly with bushing	Buna-N and bronze
			FKM and bronze
19	2	Stud (continuous), bonnet	ASTM A193 Gr. B7
20	4	Stud (double ended), body	ASTM A193 Gr. B7

† Recommended spare parts. Contact Cameron for specific part numbers.

Series DMA gate valves—7,500-psi WP—Automated

2-in [50-mm] seat port

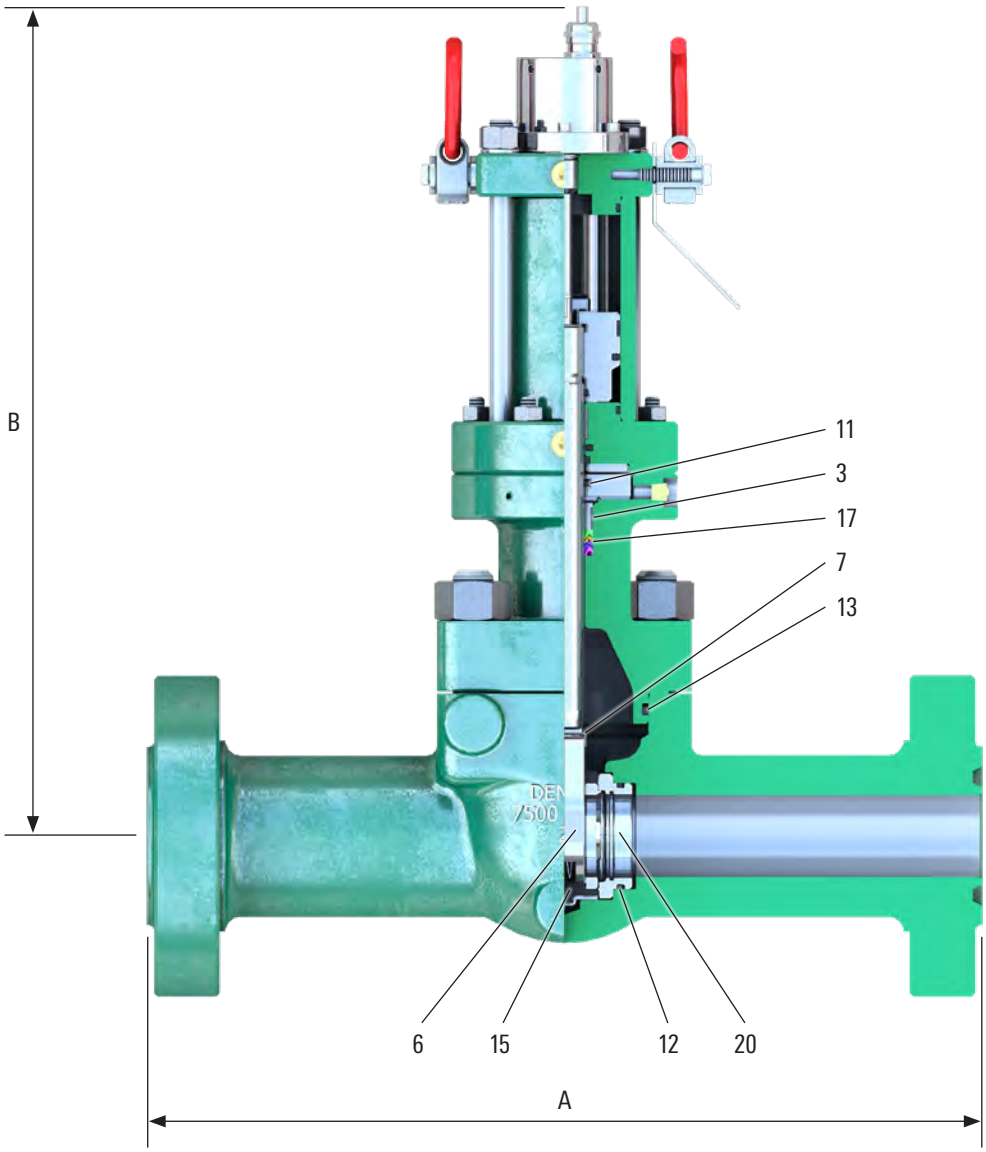

Dimensional Data and Weights		
Dimension	**Valve Seat Port Size for for 7,500-psi WP: 2 in [50 mm]**	
A, length, in [mm]	Weld end	9.00 [229]
	Flanged end	20.50 [521]
	Hammer union end	15.74 [400]
For flanged ends	API ring number	BX-152
	Flange ID, in [mm]	2.00 [50]
	Flange OD, in [mm]	7.88 [200]
	Flange bolts, amount; in [mm]	8; ¾ [19]
Weight, with actuator, lbm [kg]	Weld end	108 [49]
	Flanged end	169 [77]
	Hammer union end	126 [57]
Cylinder max pressure, psi [MPa]		3,000 [20.7]
Cylinder inlet/outlet connection		4X ⅜ NPT
B, height, center to top, in [mm]		19.95 [507]

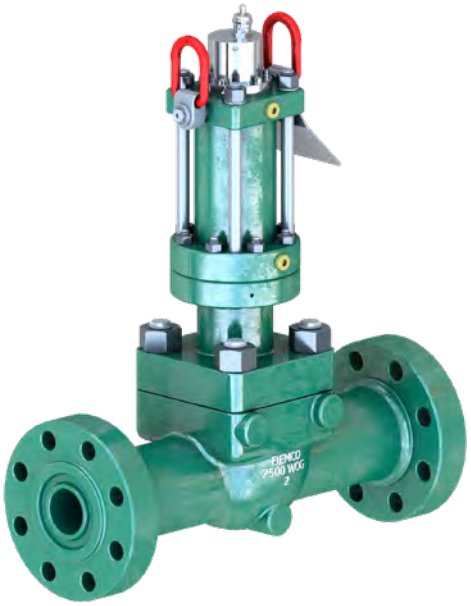

Assembly Part Number Example

J025296-3 7 8 9 1 2 0 1

Assembly Base Number
2 in [50 mm]

Actuation
Ring groove inlay
Seat and seal elastomer
Seat ring material
Gate/wear ring material
Stem material
End connection

End Connection

No.	Description
Flanged	
3	10000 RTJ
Weld	
2	2.00 in [50 mm] XXH
4	3.00 in [80 mm] OD × 2.00 in [50mm] ID
Hammer Union	
8	2.00 in [50 mm] XXH 1502 hammer union

Body Configuration

No.	Description
5	Weld
7	Flanged
9	Hammer union

Stem Material

No.	Description
8	17-4 PH SS

Gate/Wear Ring Material

No.	Description
8	17-4 PH SS/410 SS
9	17-4 PH SS/41XX

Seat Ring Material

No.	Description
1	410 SS

Seat and Seal Elastomer

No.	Description
2	FKM
4	HNBR

Ring Groove Inlay

No.	Description
0	–
1	316 SS Inlay†
2	625 SS Inlay†

† Inlay only available on flanged valves.

Actuation

No.	Description
1	With hydraulic Ledeen* actuator
2	Bare stem for actuation

Parts List

Repair Kit	Key No.	Qty.	Description	Valve Seat Port Size for 7,500-psi WP: 3 in [80 mm]			Repair Kit Component Part Numbers
				Group 1	Group 2	Group 3	
			Assembly Base Number—NACE Compliant	J025296	J025343	J025344	
	1	1	Body	ASTM A487 Gr. 4 Class D			–
	2	1	Bonnet	4130			–
■	3	1	Bushing	Gar-Fil composite			–
	4	1	Breather vent, ⅛ NPT	Steel			X-213635-01
	5	4	Capscrew socket head, ⅜ UNC × 0.75 (long)	ASTM A320 Gr. L7M			–
■	6	1	Gate	17-4 PH SS with QPQ nitriding			2603688-01
■	7	1	Gate clip	3XX SS			M450480
	8	12	Heavy hex nut, 1-8 UNC	ASTM A194 Gr. 2H	ASTM A194 Gr. 7		–
	9	8	Heavy hex nut, ⅜-16 UNC	ASTM A194 Gr. 7			–
	10	1	Ledeen actuator model LHL 70-60 DA	Assembly			–
■	11	1	O-ring, AS-568-224, rod wiper	Buna-N			J005526-214
■	12	2	O-ring, AS-568-229, wear ring seal	HNBR			2712425-03
				FKM			J005521-229
■	13	1	O-ring, AS-568-342, bonnet seal	HNBR			2712425-60
				FKM			J005521-342
	14	1	Retainer	41XX			–
■	15	1	Seat assembly	410 SS with QPQ nitriding and HNBR			2139742-01
				410 SS with QPQ nitriding and FKM			2139741-02
	16	1	Stem	17-4 PH SS with ENP			–
■	17	1	Stem seal assembly	HNBR			X-213640-01
				FKM			X-213640-02
	18	12	Stud (double ended), 1-8 UNC × 4.00 (long)	ASTM A193 Gr. B7	ASTM A193 Gr. L7		–
	19	8	Stud (double ended), ⅜-16 UNC × 2.25 (long)	ASTM A320 Gr. L7			–
■	20	2	Wear ring	41XX with QPQ nitriding			M452267
				410 SS			2139647-02

■ Major repair kit J025177-10279—one each for one year of service.
Major repair kits listed for trim option J0XXXXX-XX891401 (17-4 PH SS stem, 17-4 PH SS with QPQ gate, HNBR seat and seals).
Consult Cameron for other repair kit trim options.

Series DMA gate valves—7,500-psi WP—Automated

3-in [80-mm] seat port

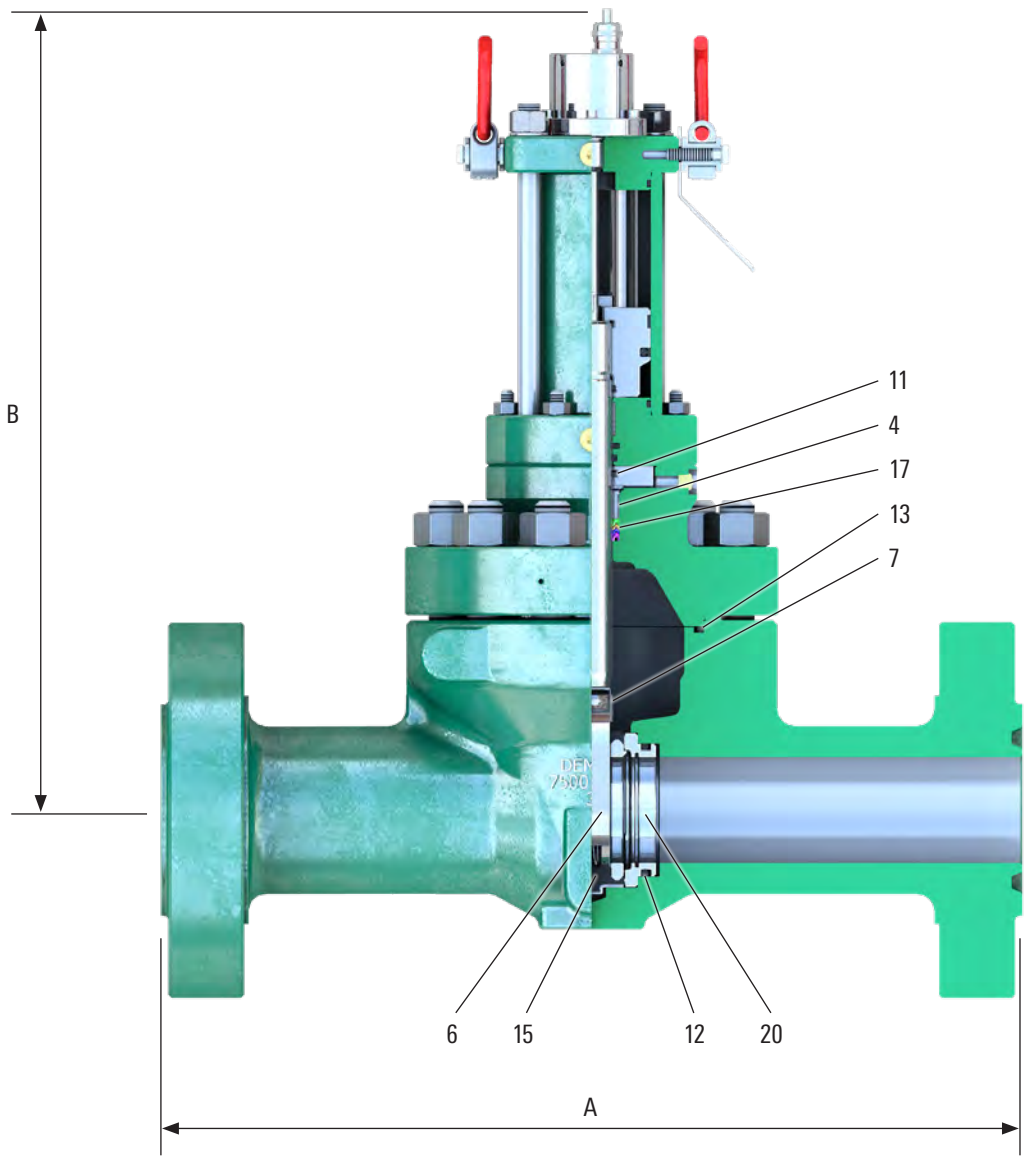

Dimensional Data and Weights			
Dimension	**Valve Seat Port Size for for 7,500-psi WP: 3 in [80 mm]**		
A, length, in [mm]	Weld end		13.00 [330]
	Flanged end		24.38 [619]
	Hammer union end	4 in	24.62 [625]
		3 in	18.88 [480]
For flanged ends	API ring number		BX-154
	Flange ID, in [mm]		3.00 [80]
	Flange OD, in [mm]		10.62 [270]
	Flange bolts, amount; in [mm]		8; 1 [25]
Weight, with actuator, lbm [kg]	Weld end		215 [97]
	Flanged end		328 [149]
	Hammer union end	4 in	299 [135]
		3 in	241 [109]
Cylinder max pressure, psi [MPa]			3,000 [20.7]
Cylinder inlet/outlet connection			4X ⅜ NPT
B, height, center to top, in [mm]			22.26 [565]

Assembly Part Number Example

J025295-3 7 8 8 1 4 2 1

Assembly Base Number
3 in [80 mm]

Actuation
Ring groove inlay
Seat and seal elastomer
Seat ring material
Gate/wear ring material
Stem material
End connection

End Connection

No.	Description
Flanged	
3	10000 RTJ
Weld	
2	3.00 in [80 mm] XXH
4	4.00 in [100 mm] XXH
5	4.50 in [114 mm] OD × 2.96 in [75 mm] ID
Hammer Union	
8	3.00 in [80 mm] XXH 1502 hammer union
9	4.00 in [100 mm] XXH 1502 hammer union

Body Configuration

No.	Description
5	Weld
7	Flanged
9	Hammer union

Stem Material

No.	Description
8	17-4 PH SS

Gate/Wear Ring Material

No.	Description
8	17-4 PH SS/410 SS
9	17-4 PH SS/41XX

Seat Ring Material

No.	Description
1	410 SS

Seat and Seal Elastomer

No.	Description
2	FKM
4	HNBR

Ring Groove Inlay

No.	Description
0	–
1	316 SS Inlay†
2	625 SS Inlay†

† Inlay only available on flanged valves.

Actuation

No.	Description
1	With hydraulic Ledeen actuator
2	Bare stem for actuation

Parts List

Repair Kit	Key No.	Qty.	Description	Valve Seat Port Size for 7,500-psi WP: 2 in [50 mm]			Repair Kit Component Part Numbers
				Group 1	Group 2	Group 3	
			Assembly Base Number—NACE Compliant	J025295	J025331	J025332	
	1	1	Body	ASTM A487 Gr. 4 Class D			–
	2	1	Bonnet	4130			–
	3	1	Breather vent, ⅛ NPT	Steel			–
■	4	1	Bushing	Gar-Fil composite			X-213633-01
	5	4	Capscrew socket head, ⅜ UNC × 0.75 (long)	ASTM A320 Gr. L7M			–
■	6	1	Gate	17-4 PH SS with QPQ nitriding			X-213643-01
■	7	1	Gate clip	3XX SS			X-213652-01
	8	12	Heavy hex nut, 1-8 UNC	ASTM A194 Gr. 2H	ASTM A194 Gr. 7		–
	9	8	Heavy hex nut, ⅜-16 UNC	ASTM A194 Gr. 7			–
	10	1	Ledeen actuator model LHL 85-84 DA	Assembly			–
■	11	1	O-ring, AS-568-217, rod wiper	Buna-N			J005526-217
■	12	2	O-ring, AS-568-340, wear ring seal	HNBR			2712783-03
				FKM			J005521-340
■	13	1	O-ring, AS-568-361, bonnet seal	HNBR			2712787-07
				FKM			J005521-361
	14	1	Retainer	41XX			–
■	15	1	Seat assembly	410 SS with QPQ nitriding and HNBR			2139744-01
				410 SS with QPQ nitriding and FKM			2139743-02
	16	1	Stem	17-4 PH SS			–
■	17	1	Stem seal assembly	HNBR			X-213638-01
				FKM			X-213638-02
	18	12	Stud (double ended), 1-8 UNC × 4.50 (long)	ASTM A193 Gr. B7	ASTM A320 Gr. L7		–
	19	8	Stud (double ended), ⅜-16 UNC × 2.25 (long)	ASTM A320 Gr. L7			–
■	20	2	Wear ring	41XX with QPQ nitriding			M452571
				410 SS			2139648-02

■ Major repair kit J025177-10379—one each for one year of service.
Major repair kits listed for trim option J0XXXXX-XX891401 (17-4 PH SS stem, 17-4 PH SS with QPQ gate, HNBR seat and seals).
Consult Cameron for other repair kit trim options.

Series DMA gate valves—7,500-psi WP—Automated

4-in [100-mm] seat port

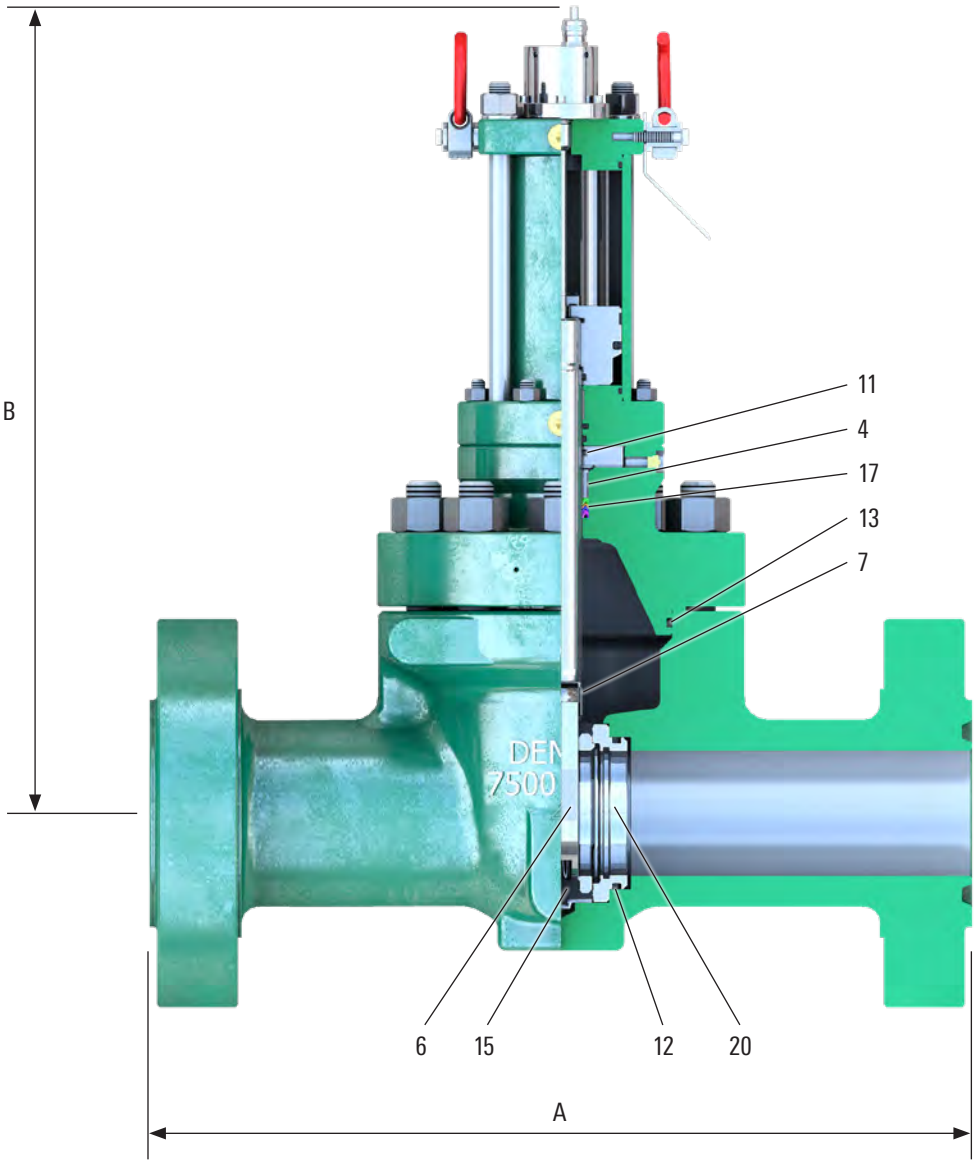

Dimensional Data and Weights			
Dimension	**Valve Seat Port Size for for 7,500-psi WP: 4 in [100 mm]**		
A, length, in [mm]	Weld end		16.00 [406]
	Flanged end		26.38 [670]
	Hammer union end	5 in	25.62 [651]
		4 in	27.62 [702]
For flanged ends	API ring number		BX-155
	Flange ID, in [mm]		4.00 [100]
	Flange OD, in [mm]		12.44 [316]
	Flange bolts, amount; in [mm]		8; 1⅛ [29]
Weight, with actuator, lbm [kg]	Weld end		311 [140]
	Flanged end		486 [220]
	Hammer union end	5 in	409 [185]
		4 in	395 [179]
Cylinder max pressure, psi [MPa]			3,000 [20.7]
Cylinder inlet/outlet connection			4X ½ NPT
B, height, center to top, in [mm]			25.47 [647]

Assembly Part Number Example

J025294-3 7 8 8 1 2 1 2

Assembly Base Number
4 in [100 mm]

Actuation
Ring groove inlay
Seat and seal elastomer
Seat ring material
Gate/wear ring material
End connection
Stem material

End Connection

No.	Description
Flanged	
3	10000 RTJ
Weld	
2	4.00 in [100 mm] XXH
3	5.00 in [125 mm] XXH
4	5.81 in [148 mm] OD × 4.06 in [103 mm]
5	6.00 in [152 mm] OD × 4.00 in [100 mm] ID
Threaded	
8	4.00 in [100 mm] XXH 1502 Hammer Union
9	5.00 in [125 mm] XXH 1502 Hammer Union

Body Configuration

No.	Description
5	Weld
7	Flanged
9	Hammer Union

Stem Material

No.	Description
8	17-4 PH SS

Gate/Wear Ring Material

No.	Description
8	17-4 PH SS/410 SS
9	17-4 PH SS/41XX

Seat Ring Material

No.	Description
1	410 SS

Seat and Seal Elastomer

No.	Description
2	FKM
4	HNBR

Ring Groove Inlay

No.	Description
0	–
1	316 SS Inlay†
2	625 SS Inlay†

† Inlay only available on flanged valves.

Actuation

No.	Description
1	With hydraulic Ledeen actuator
2	Bare stem for actuation

Parts List

Repair Kit	Key No.	Qty.	Description	Valve Seat Port Size for 7,500-psi WP: 4 in [100 mm]			Repair Kit Component Part Numbers
				Group 1	Group 2	Group 3	
			Assembly Base Number—NACE Compliant	J025294	J025329	J025330	
	1	1	Body	ASTM A487 Gr. 4 Class D			–
	2	1	Bonnet	4130			–
	3	1	Breather vent, ⅛ NPT	Steel			–
■	4	1	Bushing	Gar-Fil composite			X-213632-01
	5	4	Capscrew socket head, 7⁄16 UNC × 0.88 (long)	ASTM A320 Gr. L7M			–
■	6	1	Gate	17-4 PH SS with QPQ nitriding			X-213642-01
■	7	1	Gate clip	3XX SS			X-213651-01
	8	10	Heavy hex nut, 1⅛-8 UNC	ASTM A194 Gr. 2H	ASTM A194 Gr. 7		–
	9	8	Heavy hex nut, 7⁄16-14 UNC	ASTM A194 Gr. 7			–
	10	1	Ledeen actuator model LHL 100-110 DA	Assembly			–
■	11	1	O-ring, AS-568-220, rod wiper	Buna-N			J005526-220
■	12	2	O-ring, AS-568-349, wear ring seal	HNBR			2712787-04
				FKM			J005521-349
■	13	1	O-ring, AS-568-364, bonnet seal	HNBR			2712426-11
				FKM			J005521-364
	14	1	Retainer	41XX			–
■	15	1	Seat assembly	410 SS with QPQ nitriding and HNBR			2139746-01
				410 SS with QPQ nitriding and FKM			2139745-02
	16	1	Stem	17-4 PH SS			–
■	17	1	Stem seal assembly	HNBR			X-213637-01
				FKM			X-213637-02
	18	10	Stud (double ended), 1⅛-8 UNC × 5.50 (long)	ASTM A193 Gr. B7	ASTM A320 Gr. L7		–
	19	8	Stud (double ended), 7⁄16-14 UNC × 2.63 (long)	ASTM A320 Gr. L7			–
■	20	2	Wear ring	41XX with QPQ nitriding			M452290
				410 SS			2139649-02

■ Major repair kit J025177-10479—one each for one year of service.
Major repair kits listed for trim option J0XXXXX-XX891401 (17-4 PH SS stem, 17-4 PH with QPQ gate, HNBR seat and seals).
Consult Cameron for other repair kit trim options.

Series DMA gate valves—7,500-psi WP—Automated

5.12-in [130-mm] seat port

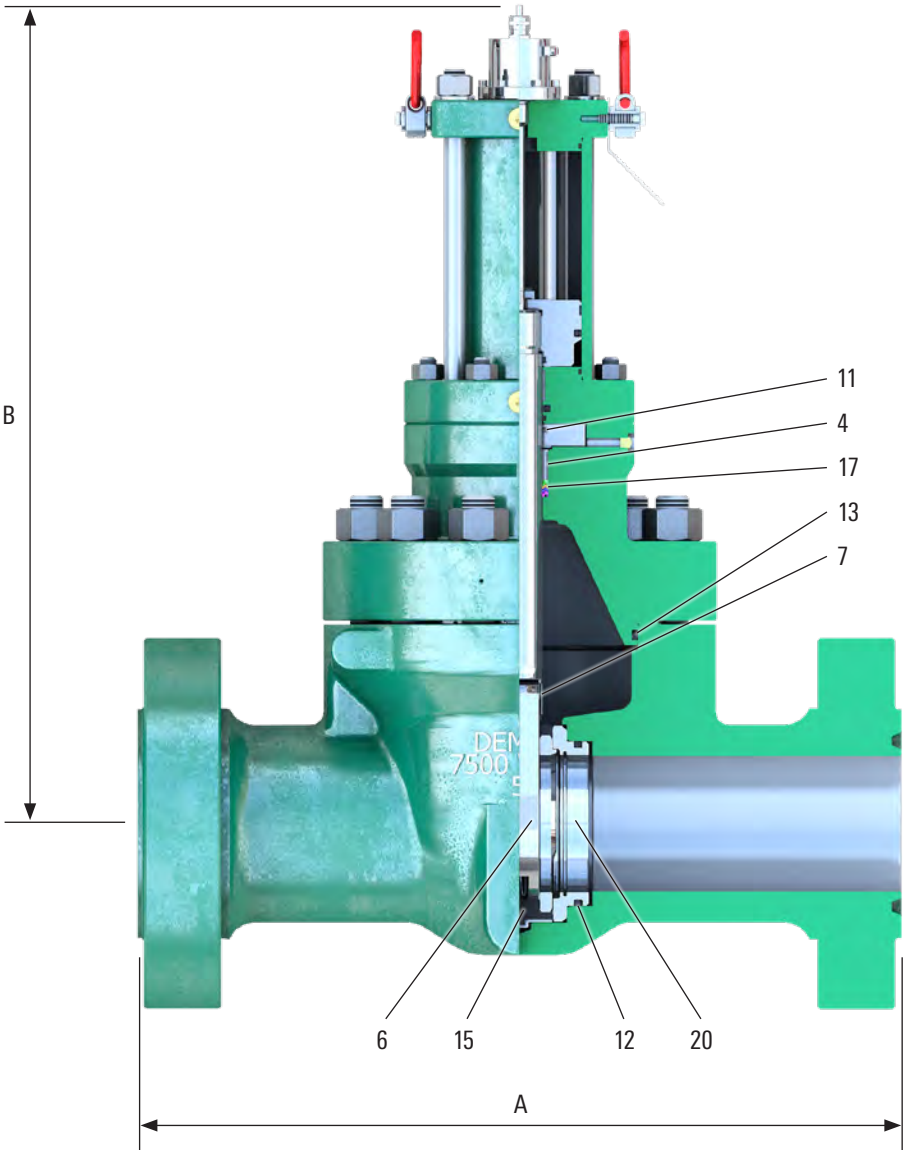

Dimensional Data and Weights		
Dimension	**Valve Seat Port Size for for 7,500-psi WP: 5.12 in [130 mm]**	
A, length, in [mm]	Weld end	17.88 [454]
	Flanged end	29.00 [737]
For flanged ends	API ring number	BX-169
	Flange ID, in [mm]	5.12 [130]
	Flange OD, in [mm]	14.06 [357]
	Flange bolts, amount; in [mm]	12; 1⅛ [29]
Weight, with actuator, lbm [kg]	Weld end	600 [272]
	Flanged end	839 [381]
Cylinder max pressure, psi [MPa]		3,000 [20.7]
Cylinder inlet/outlet connection		4X ½ NPT
B, height, center to top, in [mm]		30.66 [779]

Assembly Part Number Example

J025293-3 7 8 9 1 2 1 1

Assembly Base Number
5.12 in [130 mm]

Actuation
Ring groove inlay
Seat and seal elastomer
Seat ring material
Gate/wear ring material
Stem material
End connection

End Connection

No.	Description
Flanged	
3	10000 RTJ
Weld	
4	6.00 in [150 mm] XXH
6	7.25 in [184 mm] OD × 5.12 in [130 mm] ID

Body Configuration

No.	Description
5	Weld
7	Flanged
9	Hammer Union

Stem Material

No.	Description
8	17-4 PH SS

Gate/Wear Ring Material

No.	Description
8	17-4 PH SS/410 SS
9	17-4PH SS/41XX

Seat Ring Material

No.	Description
1	410 SS

Seat and Seal Elastomer

No.	Description
2	FKM/FKM
4	HNBR/HNBR

Ring Groove Inlay

No.	Description
0	–
1	316 SS Inlay†
2	625 SS Inlay†

† Inlay only available on flanged valves.

Actuation

No.	Description
1	With hydraulic Ledeen actuator
2	Bare stem for actuation

Parts List

Repair Kit	Key No.	Qty.	Description	Valve Seat Port Size for 7,500-psi WP: 5.12 in [130 mm]			Repair Kit Component Part Numbers
				Group 1	Group 2	Group 3	
			Assembly Base Number—NACE Compliant	J025293	J025327	J025328	
	1	1	Body	ASTM A487 Gr. 4 Class D			–
	2	1	Bonnet	4130			–
	3	1	Breather vent, ⅛ NPT	Steel			–
■	4	1	Bushing	Gar-Fil composite			X-213631-01
	5	4	Capscrew socket head, ⅝ UNC × 1.00 (long)	ASTM A320 Gr. L7M			–
■	6	1	Gate	17-4 PH SS with QPQ nitriding			X-213641-01
■	7	1	Gate clip	3XX SS			X-213650-01
	8	12	Heavy hex nut, 1¼-8 UNC	ASTM A194 Gr. 2H	ASTM A194 Gr. 7		–
	9	8	Heavy hex nut, ⅝-11 UNC	ASTM A194 Gr. 7ML			–
	10	1	Ledeen actuator model LHL 120-143 DA	Assembly			–
■	11	1	O-ring, AS-568-224, rod wiper	Buna-N			J005526-224
■	12	2	O-ring, AS-568-435, wear ring seal	HNBR			2726268-02
				FKM			J005521-435
■	13	1	O-ring, AS-568-446, bonnet seal	HNBR			2712425-78
				FKM			J005521-446
	14	1	Retainer	41XX			–
■	15	1	Seat assembly	410 SS with QPQ nitriding and HNBR			2139748-01
				410 SS with QPQ nitriding and FKM			2269500-01
	16	1	Stem	17-4 PH SS			–
■	17	1	Stem seal assembly	HNBR			X-213636-01
				FKM			X-213636-02
	18	12	Stud (double ended), 1¼-8 UNC × 6.25 (long)	ASTM A193 Gr. B7	ASTM A320 Gr. L7		–
	19	8	Stud (double ended), ⅝-11 UNC × 3.25 (long)	ASTM A320 Gr. L7M			–
■	20	2	Wear ring	41XX with QPQ nitriding			M452619
				410 SS			2139650-02

■ Major repair kit J025177-10579—one each for one year of service.
Major repair kits listed for trim option J0XXXXX-XX891401 (17-4 PH SS stem, 17-4 PH with QPQ gate, HNBR seat and seals).
Consult Cameron for other repair kit trim options.

Series DMA gate valves—5,000-psi WP—Automated

2-in [50-mm] seat port

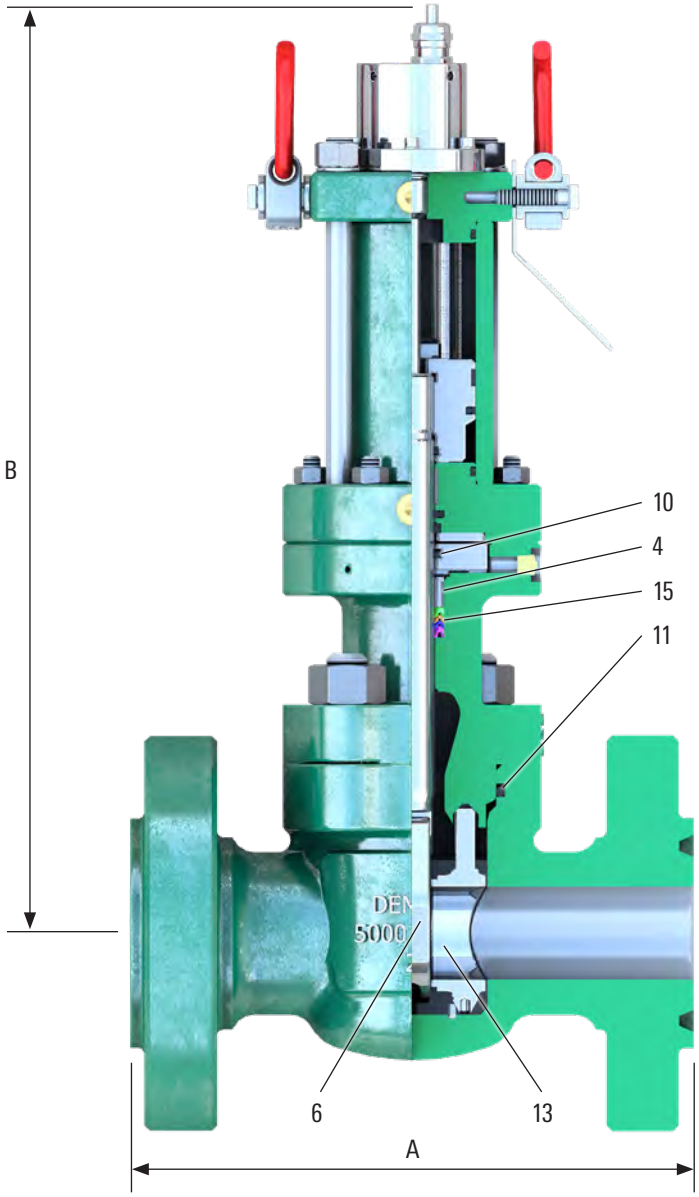

Dimensional Data and Weights		
Dimension	**Valve Seat Port Size for for 5,000-psi WP: 2 in [50 mm]**	
A, length, in [mm]	Weld end	9.00 [229]
	Flanged end	12.12 [308]
	Hammer union end	15.74 [400]
For flanged ends	API ring number	R-24
	Flange ID, in [mm]	2.00 [50]
	Flange OD, in [mm]	8.50 [216]
	Flange bolts, amount; in [mm]	8; ⅞ [22]
Weight, with actuator, lbm [kg]	Weld, and threaded end	86 [39]
	Flanged end	131 [60]
	Hammer union end	105 [48]
Cylinder max pressure, psi [MPa]		3,000 [20.7]
Cylinder inlet/outlet connection		4X ⅜ NPT
B, height, center to top, in [mm]		19.56 [497]

Assembly Part Number Example

J025341-2799 1212

Assembly Base Number
2 in [50 mm]

Actuation
Ring groove inlay
Seat, bonnet, and steam seal elastomer
Seat insert material
Gate material
Stem material
End connection

End Connection

No.	Description
Flanged	
2	5000 RTJ
Weld	
1	Sch. 80
2	XXH
5	Sch. 160
Threaded	
0	LP
2	UPTBG
Hammer Union	
9	2.00 in [50 mm] XXH 1502 Hammer Union

Body Configuration

No.	Description
4	Threaded
5	Weld
7	Flanged
9	Hammer Union

Stem Material

No.	Description
9	17-4 PH SS

Gate Material

No.	Description
9	17-4 PH SS

Seat Insert Material

No.	Description
1	1045
8	ASTM A351 Gr CF8M

Seat, Bonnet, and Steam Seal Elastomer

No.	Description
1	Buna-N/HNBR
2	FKM/FKM

Ring Groove Inlay

No.	Description
0	–
1	316 SS Inlay†
2	625 SS Inlay†

† Inlay only available on flanged valves.

Actuation

No.	Description
1	With hydraulic Ledeen actuator
2	Bare stem for actuation

Parts List

Repair Kit	Key No.	Qty.	Description	Valve Seat Port Size for 5,000-psi WP: 2 in [50 mm]	Repair Kit Component Part Numbers
			Assembly Base Number—NACE Compliant		
			2-in [50-mm] nominal end—threaded, flanged, weld, and hammer	**J025341**	
			2.5-in [65-mm] nominal end—weld	**J025342**	
	1	1	Body	ASTM A487 Gr. 4 Class D	–
	2	1	Bonnet	ASTM A487 Gr. 4 Class D	–
	3	1	Breather vent, ⅛ NPT	Steel	–
■	4	1	Bushing	Gar-Fil composite	X-213635-01
	5	4	Capscrew socket head, ⅜ UNC × 0.75 (long)	ASTM A320 Gr. 7	–
■	6	1	Gate	17-4 PH SS with QPQ nitriding	2603181-01
	7	4	Heavy hex nut, ⅞-9 UNC	ASTM A194 Gr. 2H	–
	8	8	Heavy hex nut, ⅜-16 UNC	ASTM A194 Gr. 7ML	–
	9	1	Ledeen actuator model LHL 70-63 DA	Assembly	–
■	10	1	O-ring, AS-568-214, rod wiper	Buna-N	J005526-214
■	11	1	O-ring, AS-568-439, bonnet seal	Buna-N	J005526-342
				FKM	J005531-342
	12	1	Retainer	41XX	–
■	13	1	Seat assembly	1045 and Buna-N	J001876-011
				1045 and FKM	J001876-012
				ASTM A351 Gr. CF8M and Buna-N	J001876-081
				ASTM A351 Gr. CF8M and FKM	J001876-082
	14	1	Stem	17-4 PH SS	–
■	15	1	Stem seal assembly	HNBR	X-213640-01
				FKM	X-213640-02
	16	4	Stud (double ended), ⅜-16 UNC × 2.25 (long)	ASTM A320 Gr. L7M	–
	17	8	Stud (double ended), ⅞-9 UNC × 3.25 (long)	ASTM A193 Gr. B7	–

■ Major repair kit J025216-14229—one each for one year of service.
Major repair kits listed for trim option J0XXXXX-XX991101 (17-4 PH SS with QPQ nitriding, 1045 insert, Buna-N seat, bonnet seal, and HNBR steam seal).
Consult Cameron for other repair kit trim options.

Series DMA gate valves—5,000-psi WP—Automated

4-in [100-mm] seat port

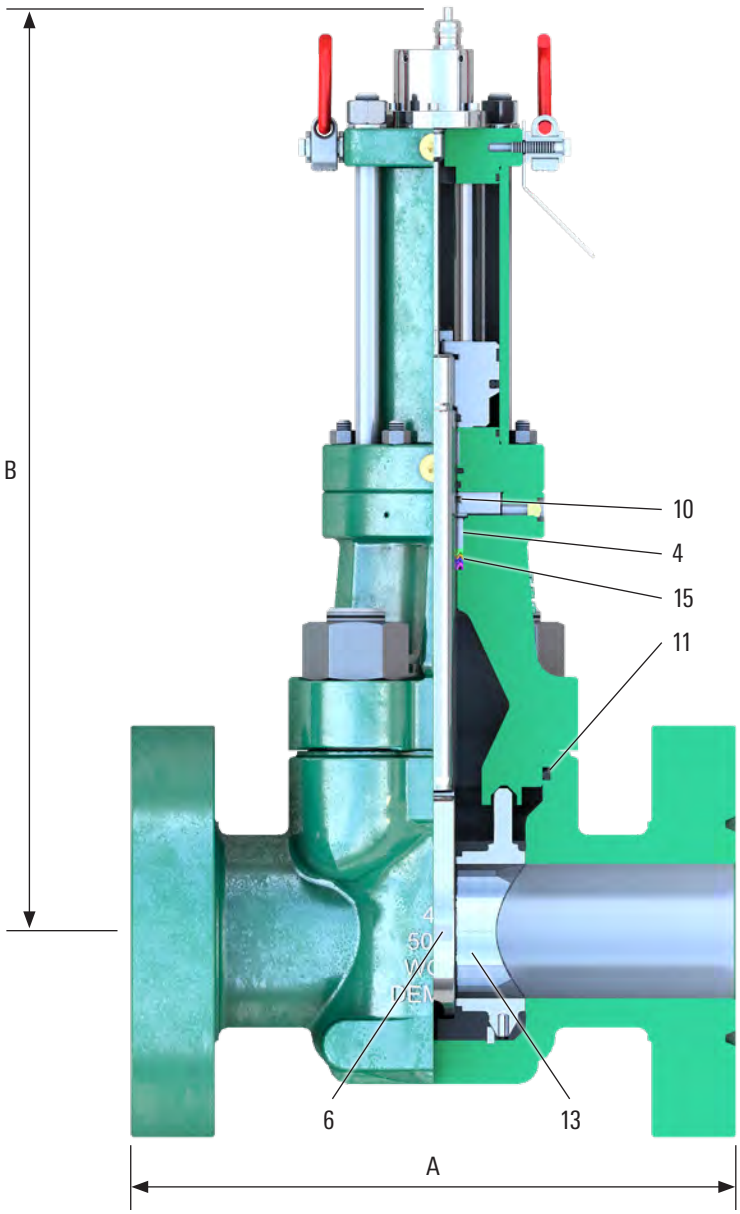

Dimensional Data and Weights			
Dimension	**Valve Seat Port Size for for 5,000-psi WP: 4 in [100 mm]**		
A, length, in [mm]	Weld end		13.00 [330]
	Flanged end		18.00 [457]
	Hammer union end	5 in	22.62 [574]
		4 in	24.62 [625]
For flanged ends	API ring number		R-39
	Flange ID, in [mm]		4.00 [100]
	Flange OD, in [mm]		12.25 [311]
	Flange bolts, amount; in [mm]		8; 1¼ [32]
Weight, with actuator, lbm [kg]	Weld, and threaded end		272 [123]
	Flanged end		409 [185]
	Hammer union end	5 in	368 [167]
		4 in	364 [165]
Cylinder max pressure, psi [MPa]			3,000 [20.7]
Cylinder inlet/outlet connection			4X ½ NPT
B, height, center to top, in [mm]			27.11 [689]

Assembly Part Number Example

J025297-27998101

Assembly Base Number
4 in [100 mm]

Actuation
Ring groove inlay
Seat, bonnet, and steam seal elastomer
Seat insert material
Gate material
Stem material
End connection

End Connection	
No.	**Description**
Flanged	
2	5000 RTJ
Weld	
1	Sch. 80
2	XXH
5	Sch. 160
Threaded	
0	LP
1	TBS
Hammer Union	
8	4.00 in [100 mm] XXH 1502 Hammer Union
9	5.00 in [125 mm] XXH 1502 Hammer Union

Body Configuration	
No.	**Description**
4	Threaded
5	Weld
7	Flanged
9	Hammer Union

Stem Material	
No.	**Description**
9	17-4 PH SS

Gate Material	
No.	**Description**
9	17-4 PH SS

Seat Insert Material	
No.	**Description**
1	1045
8	ASTM A351 Gr CF8M

Seat, Bonnet, and Steam Seal Elastomer	
No.	**Description**
1	Buna-N/HNBR
2	FKM/FKM

Ring Groove Inlay	
No.	**Description**
0	–
1	316 SS Inlay†
2	625 SS Inlay†

† Inlay only available on flanged valves.

Actuation	
No.	**Description**
1	With hydraulic Ledeen actuator
2	Bare stem for actuation

Parts List

Repair Kit	Key No.	Qty.	Description	Valve Seat Port Size for 5,000-psi WP: 4 in [100 mm]	Repair Kit Component Part Numbers
			Assembly Base Number—NACE Compliant		
			4-in [100-mm] nominal end—threaded, flanged, weld, and hammer	**J025297**	
			5-in [125-mm] nominal end—weld and hammer	**J025333**	
	1	1	Body	ASTM A487 Gr. 4 Class D	–
	2	1	Bonnet	ASTM A487 Gr. 4 Class D	–
	3	1	Breather vent, ⅛ NPT	Steel	–
■	4	1	Bushing	Gar-Fil composite	X-213632-01
	5	4	Capscrew socket head, 7⁄16 UNC × 0.88 (long)	ASTM A320 Gr. 7	–
■	6	1	Gate	17-4 PH SS with QPQ nitriding	2603247-01
	7	4	Heavy hex nut, 1¾ special	ASTM A194 Gr. 2H	–
	8	8	Heavy hex nut, 7⁄16-14 UNC	ASTM A194 Gr. 7ML	–
	9	1	Ledeen actuator model LHL 100-119 DA	Assembly	–
■	10	1	O-ring, AS-568-220, rod wiper	Buna-N	J005526-220
■	11	1	O-ring, AS-568-439, bonnet seal	Buna-N	J005526-439
				FKM	J005531-439
	12	1	Retainer	41XX	–
■	13	1	Seat assembly	1045 and Buna-N	X-213637-01
				1045 and FKM	X-213637-02
				ASTM A351 Gr. CF8M and Buna-N	J002207-081
				ASTM A351 Gr. CF8M and FKM	J002207-082
	14	1	Stem	17-4 PH SS	–
■	15	1	Stem seal assembly	HNBR	X-213637-01
				FKM	X-213637-02
	16	4	Stud (double ended), 1¾ special × 6.00 (long)	ASTM A193 Gr. B7	–
	17	8	Stud (double ended), 7⁄16-14 UNC × 2.63 (long)	ASTM A320 Gr. L7	–

■ Major repair kit J025216-14229—one each for one year of service.
Major repair kits listed for trim option J0XXXXX-XX991101 (17-4 PH SS with QPQ nitriding, 1045 insert, Buna-N seat, bonnet seal, and HNBR steam seal).
Consult Cameron for other repair kit trim options.

Series DMA gate valves—5,000-psi WP—Automated

5.12-in [130-mm] seat port

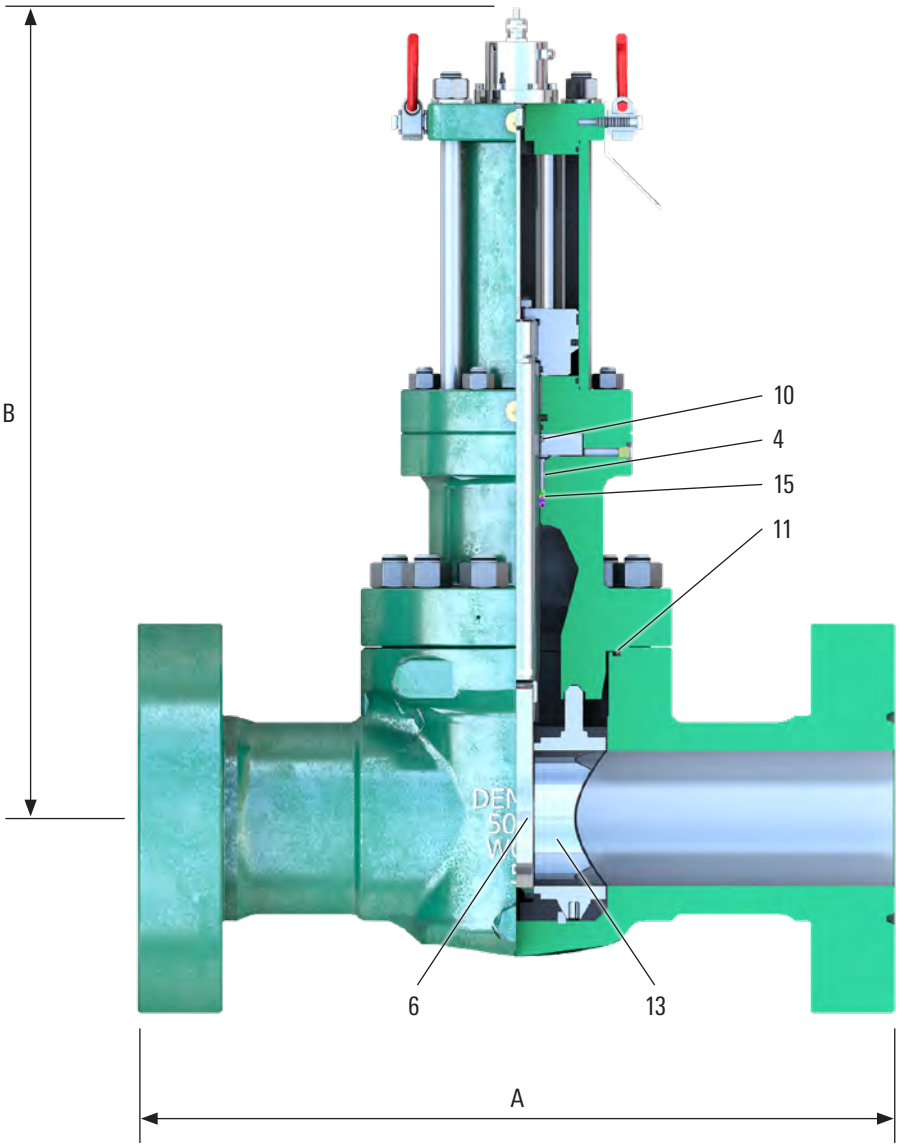

Dimensional Data and Weights		
Dimension	**Valve Seat Port Size for for 5,000-psi WP: 5.12 in [130 mm]**	
A, length, in [mm]	Weld end	16.00 [406]
	Flanged end	28.62 [727]
For flanged ends	API ring number	R-44
	Flange ID, in [mm]	5.12 [130]
	Flange OD, in [mm]	14.75 [375]
	Flange bolts, amount; in [mm]	8; 1½ [38]
Weight, with actuator, lbm [kg]	Weld, and threaded end	415 [188]
	Flanged end	697 [316]
Cylinder max pressure, psi [MPa]		3,000 [20.7]
Cylinder inlet/outlet connection		4X ½ NPT
B, height, center to top, in [mm]		30.25 [768]

Assembly Part Number Example

J025325-7799221 1

Assembly Base Number
5.12 in [130 mm]

Actuation
Ring groove inlay
Seat, bonnet, and steam seal elastomer
Seat insert material
Gate material
Stem material
End connection

End Connection	
No.	**Description**
Flanged	
7	5000 RTJ
Weld	
2	XXH
5	Sch. 160
Threaded	
3	LC

Body Configuration	
No.	**Description**
4	Threaded
5	Weld
7	Flanged

Stem Material	
No.	**Description**
9	17-4 PH SS

Gate Material	
No.	**Description**
9	17-4 PH SS

Seat Insert Material	
No.	**Description**
1	1045
8	ASTM A351 Gr CF8M

Seat, Bonnet, and Steam Seal Elastomer	
No.	**Description**
1	Buna-N/HNBR
2	FKM/FKM

Ring Groove Inlay	
No.	**Description**
0	–
1	316 SS Inlay†
2	625 SS Inlay†

† Inlay only available on flanged valves.

Actuation	
No.	**Description**
1	With hydraulic Ledeen actuator
2	Bare stem for actuation

Parts List

Repair Kit	Key No.	Qty.	Description	Valve Seat Port Size for 5,000-psi WP: 5.12 in [130 mm]	Repair Kit Component Part Numbers
			Assembly Base Number—NACE Compliant		
			5-in [125-mm] nominal end—threaded and flanged	**J025325**	
			6-in [150-mm] nominal end—weld	**J025334**	
	1	1	Body	ASTM A487 Gr. 4 Class D	–
	2	1	Bonnet	ASTM A487 Gr. 4 Class D	–
	3	1	Breather vent, ⅛ NPT	Steel	–
■	4	1	Bushing	Gar-Fil composite	X-213631-01
	5	4	Capscrew socket head, ⅝ UNC × 1.00 (long)	ASTM A320 Gr. L7M	–
■	6	1	Gate	17-4 PH SS with QPQ nitriding	2603248-01
	7	12	Heavy hex nut, 1-8 UNC	ASTM A194 Gr. 2H	–
	8	8	Heavy hex nut, ⅝-11 UNC	ASTM A194 Gr. 7ML	–
	9	1	Ledeen actuator model LHL 120-148 DA	Assembly	–
■	10	1	O-ring, AS-568-224, rod wiper	Buna-N	J005526-224
■	11	1	O-ring, AS-568-367, bonnet seal	Buna-N	J005520-367
				FKM	J005531-367
	12	1	Retainer	41XX	–
■	13	1	Seat assembly	1045 and Buna-N	J021948-019
				1045 and FKM	J021948-012
				ASTM A351 Gr. CF8M and Buna-N	J021948-099
				ASTM A351 Gr. CF8M and FKM	J021948-092
	14	1	Stem	17-4 PH SS	–
■	15	1	Stem seal assembly	HNBR	X-213636-01
				FKM	X-213636-02
	16	12	Stud (double ended), 1-8 UNC × 4.50 (long)	ASTM A193 Gr. B7	–
	17	8	Stud (double ended), ⅝-11 UNC × 3.25 (long)	ASTM A320 Gr. L7M	–

■ Major repair kit J025216-15229—one each for one year of service.
Major repair kits listed for trim option J0XXXXX-XX991101 (17-4 PH SS with QPQ nitriding, 1045 insert, Buna-N seat, bonnet seal, and HNBR stem seal).
Consult Cameron for other repair kit trim options.

Gate-Style DEMCO Valves

products.slb.com/valves

*Mark of Schlumberger
Other company, product, and service names
are the properties of their respective owners.
Copyright © 2019 Schlumberger. All rights reserved. 17-VL-362851

CAMERON
A Schlumberger Company